PLEASE NOTE

This owner's manual is for a previously produced operator model. This model is no longer in production.

If you are inquiring about our newest operator, please click here to access the owner's manual for the Hydraulic (HYJG) model.

HYJD-DC-25 & HYJD-DC-25E HYDRAULIC VERTICAL PIVOT GATE

Operator's & Parts Manual

NOTE: WHEN ORDERING PARTS, PLEASE HAVE YOUR SERIAL NUMBER TO ENSURE THE CORRECT PARTS ARE SENT TO YOU.

This manual subject to change with out notice.

Ideal Manufacturing, Inc. • 2011 Harnish Blvd. • Billings, MT 59101
P (406) 656-4360 • F (406) 656-4363

$20.00 USD Funds 10/9/2014 SERIAL NUMBER _____

TABLE OF CONTENTS

2011 Harnish Blvd.
Billings, MT 59101

INFO@TILTAWAY.COM
406-656-4360 800-523-3888

TILT-A-WAY LIMITED WARRANTY

Ideal Manufacturing warrants that its Tilt-A-Way vertical pivot gate Model HYJD-DC-25 and HYJD-DC-25E products will be free from defects in materials and workmanship for a period of 3 years from the date of purchase. If the product fails to function because of defects in materials or workmanship within the 3 year period of time being used for the purpose for which it was designed, Ideal Manufacturing will repair or replace the defective part at its option. This warranty does not cover products or accessories that are not manufactured by Ideal Manufacturing, Inc. That product follows the warranty, and guidelines of that manufacturer. This warranty excludes electrical components and damage due to Acts of God, unauthorized modifications, misuse, abuse or negligence to this product.

In order to proceed with a warranty claim, Ideal Manufacturing must be notified of the problem. A new part will be shipped out prepaid (Ground UPS). If the customer requests that the part be expedited that shipping charge will be charged to the owner.

The part that is being warranted must be returned to Ideal Manufacturing, postage prepaid. When the new part is shipped out, it will go out with an invoice and a warranty part return number. The defective part must be returned to Ideal Manufacturing, freight prepaid, with the warranty part return number. At that time the invoice will be considered paid in full.

This warranty is exclusive and in lieu of all other obligation, liabilities or warranties. In no event shall Ideal Manufacturing be liable or responsible for incidental or consequential damage or for any other direct or indirect damage loss, cost, expense or fee.

This warranty shall not apply to any products or parts that have been altered or repaired without written consent of Ideal Manufacturing.

Labor to remove and reinstall defective product or parts will be paid from a labor rate and schedule only. Consult Ideal Manufacturing for that rate and schedule.

For further information on returning your product or questions concerning Ideal Manufacturing warranty, please contact Ideal Manufacturing.

IMPORTANT SAFETY INFORMATION

Before installing the installer should read and understand the owners manual and safety instructions. The owner should keep this owners manual.

WARNING-TO REDUCE THE RISK OF INJURY TO PERSONS

1. Do not operate gate unless all safety devices are connected and working properly.
2. Do not permit children to play on or around a gate. Keep all controls out of reach from children.
3. Automatic gates are not intended for pedestrian use. Pedestrians must be supplied a separate entrance separate from the automatic gate.
4. Never operate an automatic gate system without visual contact so it can be shut down if necessary.
5. Access controls, are required, to be mounted at least 6 feet away from the gate and operator.
6. Disconnect all power before performing any maintenance on your gate or operator.
7. Keep your gate properly maintained-have a qualified service person make all repairs.
8. Test your gate monthly; make sure all safety devices are in working order. If you have a reversing edge use a rigid object to actuate the edge photo eyes-use an object to break the beam to insure it is in working order.
9. The gate and operator must have the appropriate primary and secondary safety devices to match the gate class installation.
10. Operator and barrier must display warning signs on both sides, in view of operator.
11. Do not install added weight to the gate barrier, your barrier has been balanced at the factory, if you add weight to the gate barrier it will make your gate out of balance, which could cause it to malfunction.
12. Only qualified personnel should install this equipment. Failure to meet this requirement could cause severe injury and or death, for which the manufacturer cannot be held responsible.
13. Safety devices, such as photo eyes and reversing edges should be installed to provide protection for personal Property and pedestrians.
14. Before turning the power on be sure that the correct voltage has been supplied to the electric motor and the equipment has been properly grounded

CLASS OF VEHICULAR GATES

Glossary

CLASS I-RESIDENTIAL VEHICULAR GATE OPERATOR (3.15)

A vehicular gate operator (or system) intended for use in a home of one to four single family dwelling, or a garage or parking area associated therewith.

CLASS II-COMMERCIAL/GENERAL ACCESS VEHICULAR GATE OPERATOR (3.16)

A vehicular gate operator (or system) intended for use in a commercial location or building such as multi-family housing unit (five or more single family unit), hotel, garages, retail store, or other building servicing the general public.

CLASS III-INDUSTRIAL/LIMITED ACCESS VEHICULAR GATE OPERATOR (3.17)

A vehicular gate operator (or system) intended for use in an industrial location or building such as a factory or loading dock area or other locations not intended to service the general public.

CLASS IV-RESTRICTED ACCESS VEHICULAR GATE OPERATOR (3.18)

A vehicular gate operator (or system) intended for use in a guarded industrial location or building such as an airport security area or other restricted access locations not servicing the general public, in which unauthorized access ins prevented via *supervision by security personnel*.

INSTRUCTIONS FOR MANUAL OPERATION HYJD-DC-25 & HYJD-DC-25E

1.Locate two Brass colored knurled knobs on the top of the pump housing
(If equipped with a cold weather package, lift flap on the black cover to access knobs.)
2.Turn both knobs counter clockwise one full turn to open.
3.Gate barrier can now be lifted manually from out at the end of gate.
4.Turn knobs clockwise to close, then operate gate normally.

PROTECTION AGAINST ENTRAPMENT

Gate operator category				
	Horizontal slide, vertical lift. and vertical pivot		Swing and vertical barrier (arm)	
Usage class	Primary type (a)	Secondary type (a)	Primary type (a)	Secondary type (a)
Vehicular I and II	A	B1, B2, or D	A, or C	A, B1, B2, C, OR D A, B1, B2, C,
Vehicular III	A, B1, or B2	A, B1, B2, D, or E	A, B1, B2, or C	D, or E
Vehicular IV	A, B1, B2, or D	A, B1, B2, D, or E	A, B1, B2, C, OR D	A, B1, B2, C, D, or E

Note-The same type of device shall not be utilized for both the primary and the secondary entrapment protection means. Use of a single device to cover both the opening and closing directions is in accordance with the requirement; however, a single device is not required to cover both directions. A combination of one Type B1 for one direction and one Type B2 for the other direction is the equivalent of one device for the purpose of complying with the requirements of either the primary of secondary entrapment protection means.
(a) Entrapment protection types:
Type A ï Inherent entrapment protection system. See 31.1.5.
Type B1 ï Provision for connection of, or supplied with, a non-contact sensor (photoelectric sensor or the equivalent). See 31.1.6 ï 31.1.9.
Type B2 ï Provision for connection of, or supplied with, a contact sensor (edge device or the equivalent). See 31.1.7 and 31.1.10 ï 31.1.12.
Type C ï Inherent adjustable clutch of pressure relief device. See 31.1.13.
Type D ï Provision for connection of, or supplied with, an actuating device requiring continuous pressure to maintain opening or closing motion of the gate. See 31.1.14 and 31.1.15.
Type E - An inherent audio alarm. See 31.1.16, 31.1.17, and 31.1.18

Specifications

Model#			**HYJD-DC-25**	
Operator Size			**28” W x 50” T x 120”L**	
Operator Weight			**1,800 lbs.**	
Maximum Barrier Size			**96” T x 300”L-375 lbs**	
Model#			**HYJD-DC-25E**	
Operator Size			**28”W x 50”T x 132”L**	
Operator Weight			**1,830 lbs**	
Maximum Barrier Size			**108” T x 300”L-375 lbs**	
Voltage	**Phase**	**Hz**	**Cir. Reg. Amps.**	**Act. Draw**
120 VAC	**1**	**60**	**20**	**14**
Operator Speed to 90°			**16-20 Seconds**	
Hydraulic Fluid			**Aeroshell 4**	

Note: Minimum Circuit Requirements: 20 amp service at 120 VAC Single Phase .
For wire sizes consult the NEC (National Electric Code).

MADE IN U.S.A.

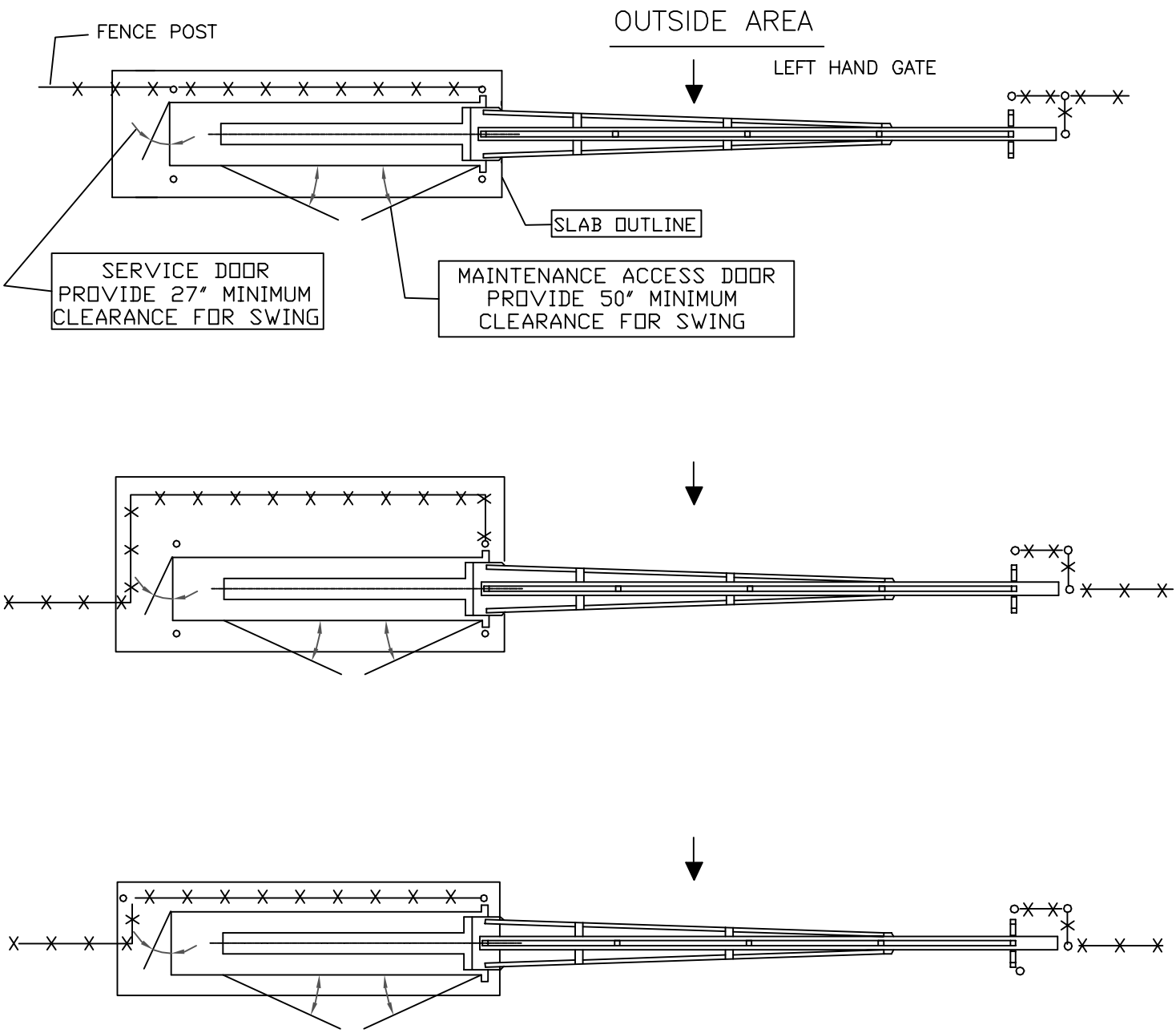

INDICATED ARE THREE MOST COMMON WAYS TO SET A TILT-A-WAY GATE
INDIVIDUAL CONDITIONS MAY REQUIRE A SPECIAL ARRANGEMENT

ALTERNATE FENCE SCHEMES
HYJD-DC-25 & HYJD-DC-25E

IDEAL MANUFACTURING INC.

DATE 4-26-2011 DWG # RGHY 3001

GENERAL INFORMATION

The PEO202P Ideal logic timer board allows numerous programmable functions in various combinations (See Universal Commercial Logic Function Chart). This logic board contains an adjustable time for automatic closing which is adjustable from 1 second to 4 minutes.
When the time function is selected (Switch #3 ON), the timing sequence starts when the gate activates the open limit switch. (At this time the TIMER ACTIVE LIGHT comes ON.) The gate will automatically close after a predetermined time. The timing range is adjustable from 1 second to 4 minutes. The timer is reset by activating any input, which is selected to set the timer. Any combination of inputs will allow you to have more switches ON than are shown for any one input. For example: Input #2 SAFETY (Stop and Reverse) plus input #8 TIMER (Open and Always Set Timer). Switch #3 and switch #5 will both be ON.

GENERAL CIRCUIT BOARD CONNECTIONS

The numbers below refer to the terminal strip (#1 - #15) in the gate operator. All inputs are normally open.
SAFETY
Terminals 2 and 3 In the open position, this input will prevent the gate from closing, or if the timer is used, hold the timer until the input is cleared. In the closing cycle, activation of this input with reverse the gate to full open position, and if the timer is used, set and hold the timer until the input is cleared.
AUX TIMER
Terminals 2 and 4 this input is active only when timer circuit is used. In the open position, activation of this input will hold the timer until the input is cleared. In the closing cycle, activation of this input will reverse the gate to full open position, set the timer and hold the time until the input is cleared.
TIMER
Terminal 2 and 5 This input is active only when the timer circuit is used. When the gate is in the closed position activation of this input will open the gate and set the time. In the open position, this input will hold the timer until the input is cleared. In the closing cycle, activation of this input will reverse the gate to full open position, set the timer and hold the timer until the input is cleared.

ELECTRICAL LOGIC TIMER BOARD GENERAL CAPABILITY

TIMER BOARD
Terminal 2 and 6 This input is active only when the timer circuit is used. Then the operator is in the full open position, activation of this input will hold the timer until the input is cleared. This input will NOT reverse the gate when the operator is in the closing cycle.
SINGLE BUTTON
Terminal 2 and 11 When in the closed position, activation of this input will open gate. When in the opening cycle, activation of this input will stop the gate. If gate is stopped in mid travel, this input will open the gate when activated. In the full open position, activation of this input will close the gate. In the closing cycle, this input will reverse the gate to the full open position.
CLOSE
Terminal 2 and 12 When the gate is in the full open position or stopped in mid travel, activation of this input will close the gate.
OPEN
Terminal 2 and 13 When the gate is in the full closed position or stopped in mid travel, activation of this input will open the gate.
STOP
Terminal 7 and 8 This is a NORMALLY CLOSED circuit. Anytime the stop circuit is opened, all functions of the logic board will cease. Then the circuit is once again closed, the desired input will have to be reactivated to start the function once again.

	INPUT:	FUNCTION:	SWITCH POSITION							
			1.	2.	3.	4.	5.	6.	7.	8.
1.	SAFETY	WHEN DOOR IS OFF DOWN LIMIT STOPPING SAFETY ONLY	OFF	OFF	OFF	OFF	OFF	OFF	OFF	OFF
2.	SAFETY	WHEN DOOR IS OFF DOWN LIMIT STOP AND REVERSE	OFF	OFF	OFF	OFF	ON	OFF	OFF	OFF
3.	SAFETY	WHEN DOOR IS OFF DOWN LIMIT INSTANT REVERSE	OFF	OFF	OFF	OFF	ON	ON	OFF	OFF
4.	SAFETY	WHEN DOOR IS OFF DOWN LIMIT STOP AND REVERSE AND SET TIMER	OFF	ON	ON	OFF	ON	OFF	OFF	OFF
5.	SAFETY	WHEN DOOR IS OFF DOWN LIMIT INSTANT REVERSE AND SET TIMER	OFF	ON	ON	OFF	ON	ON	OFF	OFF
6.	AUX. TIMER	WHEN DOOR IS OFF DOWN LIMIT OPEN AND SET TIMER STOP AND REVERSE AND SET TIMER	OFF	OFF	ON	OFF	OFF	OFF	OFF	OFF
7.	AUX. TIMER	WHEN DOOR IS OFF DOWN LIMIT OPEN AND SET TIMER INSTANT REVERSE AND SET TIMER	OFF	OFF	ON	OFF	OFF	ON	OFF	OFF
8.	TIMER	OPEN AND ALWAYS SET TIMER STOP AND REVERSE AND SET TIMER	OFF	OFF	ON	OFF	OFF	OFF	OFF	OFF
9.	TIMER	OPEN AND ALWAYS SET TIMER INSTANT REVERSE AND SET TIMER	OFF	OFF	ON	OFF	OFF	ON	OFF	OFF
10.	HOLD	HOLD TIMER RESET TIMER ONLY DURING TIMING PERIOD	OFF	OFF	ON	OFF	OFF	OFF	OFF	OFF
11.	STOP	STOP DOOR / GATE TRAVEL ONLY	OFF	OFF	OFF	OFF	OFF	OFF	OFF	OFF
12.	STOP	STOP DOOR / GATE TRAVEL AND TIMER	OFF	OFF	ON	OFF	OFF	OFF	OFF	OFF
13.	SINGLE BUTTON	OPEN CYCLE OPEN - PARK - OPEN CLOSE CYCLE CLOSE - PARK - OPEN	OFF	OFF	OFF	OFF	OFF	OFF	OFF	ON
14.	SINGLE BUTTON	OPEN CYCLE OPEN - PARK - OPEN CLOSE CYCLE CLOSE - STOP - REVERSE	OFF	OFF	OFF	OFF	OFF	OFF	ON	ON
15.	SINGLE BUTTON	OPEN CYCLE OPEN - PARK - OPEN CLOSE CYCLE CLOSE - INSTANT REVERSE	OFF	OFF	OFF	OFF	OFF	ON	ON	ON
16.	SINGLE BUTTON	OPEN CYCLE SET TIMER WHEN ACTIVATED ON OPEN LIMIT CLOSE CYCLE PARK - OPEN	ON	OFF	ON	ON	OFF	OFF	OFF	ON
17.	SINGLE BUTTON	OPEN CYCLE OPEN - PARK - OPEN SET TIMER WHEN ACTIVATED ON OPEN LIMIT CLOSE CYCLE STOP AND REVERSE	ON	OFF	ON	ON	OFF	OFF	ON	ON
18.	SINGLE BUTTON	OPEN CYCLE OPEN - PARK - OPEN SET TIMER WHEN ACTIVATED ON OPEN LIMIT CLOSE CYCLE INSTANT REVERSE	ON	OFF	ON	ON	OFF	ON	ON	ON
19.	CLOSE	CLOSE DOOR / GATE EVEN WHILE TIMER IS TIMING	OFF	OFF	ON	OFF	OFF	OFF	OFF	OFF
20.	CLOSE	CLOSE DOOR / GATE EXCEPT WHEN TIMER IS TIMING	OFF	OFF	ON	ON	OFF	OFF	OFF	OFF
21.	OPEN	OPEN DOOR / GATE ONLY	NOT DEPENDENT ON ANY SWITCH POSITION							

ELECTRICAL LOGIC TIMER BOARD - GENERAL CAPABILITY

TILT-A-WAY
HYDRAULIC OPERATOR
BASIC ELECTRICAL HARDWARE
DRAWING RGHYJD-E200

	PART NO.	DESCRIPTION	QTY
1	PEO600	ENCLOSURE	1
2	FGO600	PANEL MOUNTING	1
3	PEO670	CIRCUIT BREAKER (15 AMP)	1
4	PEO642	C/B BRACKET	1
5	PEO671	CIRCUIT BEARKER (40 AMP)	1
6	PEO674	POWER SOLENOID	1
7	PEO679	RELAY 5 PIN	2
7A	PEO678	RELAY 8 PIN	2
8	PEO605A	SOCKET 5 PIN	2
8A	PEO606A	SOCKET 8 PIN	2
9	PEO672	RELAY 14 PIN	2
10	PEO673	SOCKET 14 PIN	2
11	PEO608	P/B CARTRIDGE	1
12	PEO608A	P/B OPERATOR	1
13	PEO202P	TIMER BOARD	1
14	PEO611	SAFETY SWITCH	2
15	PEO620	END BARRIER ï TERMINAL BLOCK	2
16	PEO621	GRE/YEL BLOCK- TERMINAL BLOCK	1
17	PEO622	BLACK BLOCK-TERMINAL BLOCK	3
18	PEO624	GREY BLOCK- TERMINAL BLOCK	2
19	PEO627	DOUBLE BLOCK- TERMINAL BLOCK	18
20	PEO638	BARRIER- TERMINAL BLOCK	1
21	PEO629	BARRIER- TERMINAL BLOCK	1
22	PEO630	JUMPER- TERMINAL BLOCK	1
23	PEO631	JUMPER- TERMINAL BLOCK	1
24	PEO632	JUMPER- TERMINAL BLOCK	2
25	PEO678	MARKER- +1 THRU 13	1
26	PEO634	MARKER- N,L1,G,LL1,	1
27	PEO635	T DUCT PVC 48ò- WIRE TRACK	1
28	PEO636	COVER PVC 48ò- WIRE TRACK	1
29	PEO637	DIN TRACK 34ò	1
30	PEO231	ELBOW CONNECTION 90 DEGREES	1
31	PEO235	CONNECTION STRAIGHT	3
32	PEO223	½ò ROMEX	2
33	PEO275	¾ò ROMEX	2
34	N/A	8 X ½ò SELF DRILLING PHILLIPS SCREW	19
35	PEO214	SOCKET LOOP DETECTOR (OPTIONAL)	3
36	PEO675	BATTERY CHARGER	1

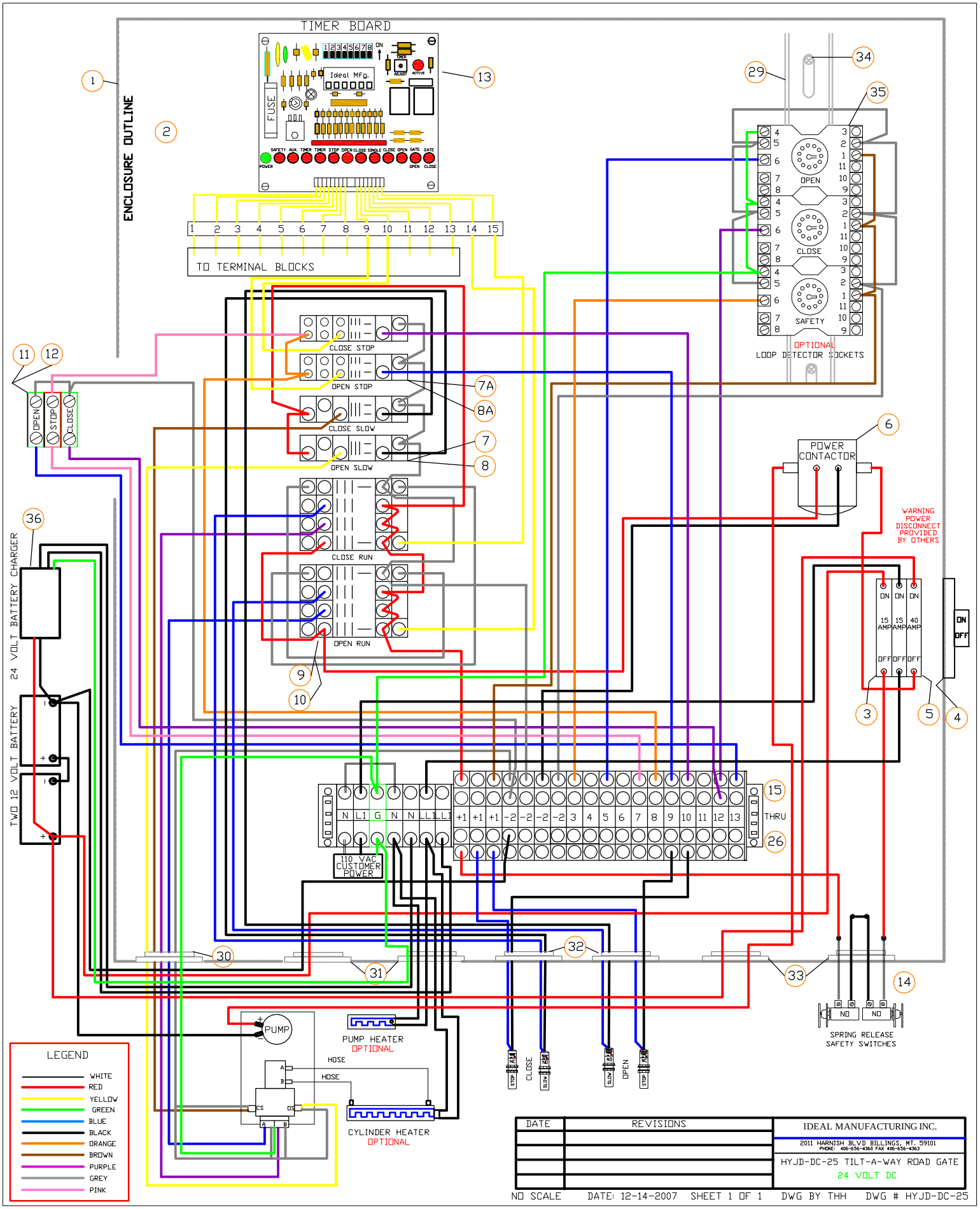
TIMER BOARD
Ideal Mfg.
FUSE
ENCLOSURE OUTLINE
TO TERMINAL BLOCKS
CLOSE STOP
OPEN STOP
CLOSE SLOW
OPEN SLOW
CLOSE RUN
OPEN RUN
OPEN
STOP
CLOSE
POWER CONTACTOR
OPEN
CLOSE
SAFETY
OPTIONAL
LOOP DETECTOR SOCKETS
WARNING
POWER
DISCONNECT
PROVIDED
BY OTHERS
ON
OFF
15 AMP
15 AMP
40 AMP
24 VOLT BATTERY CHARGER
TWO 12 VOLT BATTERY
110 VAC CUSTOMER POWER
THRU
PUMP
PUMP HEATER
OPTIONAL
HOSE
HOSE
CYLINDER HEATER
OPTIONAL
SPRING RELEASE
SAFETY SWITCHES
NO
NO
LEGEND
WHITE
RED
YELLOW
GREEN
BLUE
BLACK
ORANGE
BROWN
PURPLE
GREY
PINK
DATE
REVISIONS
IDEAL MANUFACTURING INC.
2011 HARNISH BLVD BILLINGS, MT. 59101
PHONE: 406-656-4368 FAX 406-656-4363
HYJD-DC-25 TILT-A-WAY ROAD GATE
24 VOLT DC
NO SCALE
DATE: 12-14-2007
SHEET 1 OF 1
DWG BY THH
DWG # HYJD-DC-25

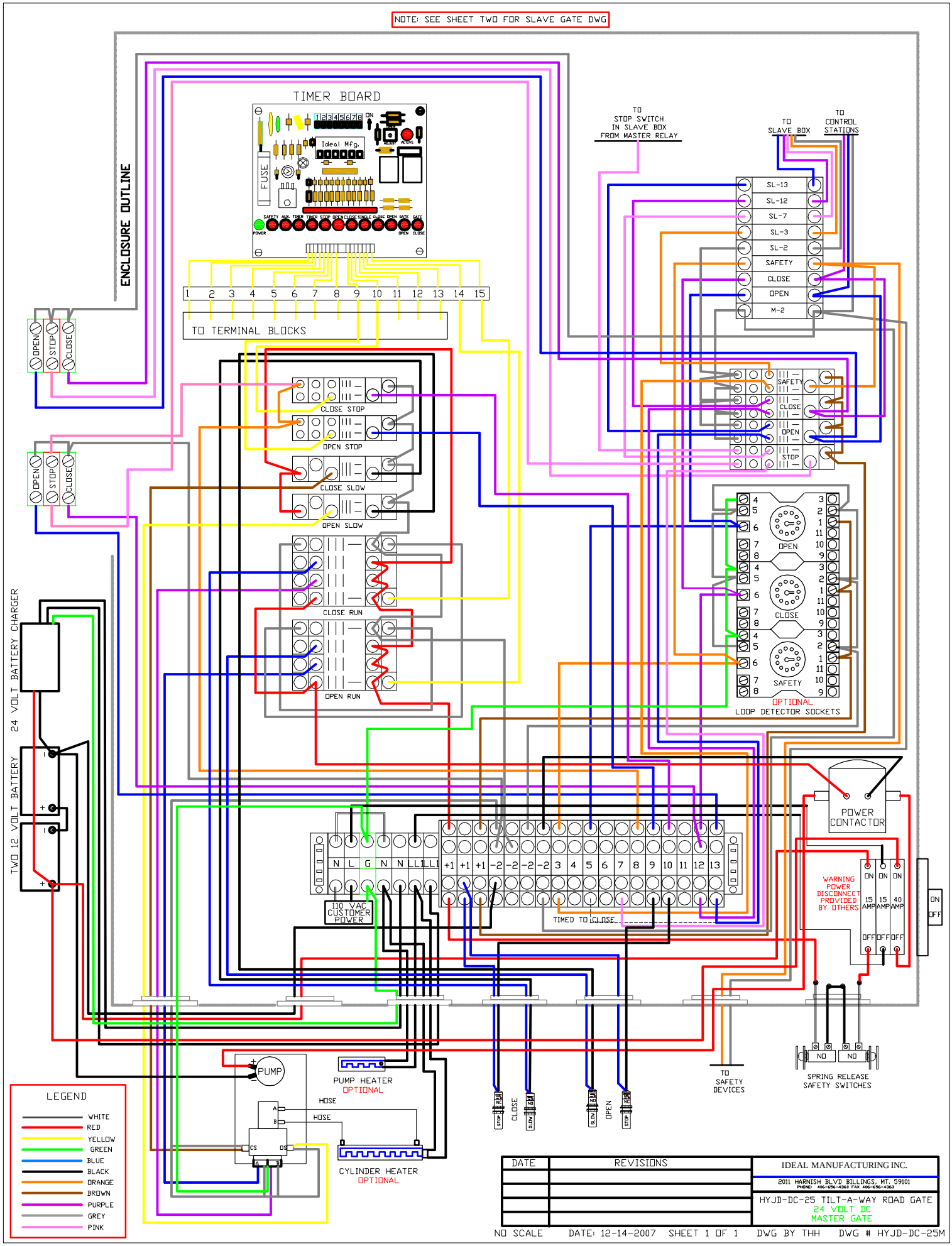
NOTE: SEE SHEET TWO FOR SLAVE GATE DWG
TIMER BOARD
Ideal Mfg.
FUSE
ENCLOSURE OUTLINE
TO STOP SWITCH IN SLAVE BOX FROM MASTER RELAY
TO SLAVE BOX
TO CONTROL STATIONS
SL-13
SL-12
SL-7
SL-3
SL-2
SAFETY
CLOSE
OPEN
M-2
1 2 3 4 5 6 7 8 9 10 11 12 13 14 15
TO TERMINAL BLOCKS
OPEN
STOP
CLOSE
CLOSE STOP
OPEN STOP
CLOSE SLOW
OPEN SLOW
CLOSE RUN
OPEN RUN
OPTIONAL
LOOP DETECTOR SOCKETS
24 VOLT BATTERY CHARGER
TWO 12 VOLT BATTERY
POWER CONTACTOR
N L G N N L1 L1 L1
+1 +1 +1 -2 -2 -2 -2 3 4 5 6 7 8 9 10 11 12 13
110 VAC CUSTOMER POWER
TIMED TO CLOSE
WARNING POWER DISCONNECT PROVIDED BY OTHERS
ON ON ON
15 AMP 15 AMP 40 AMP
OFF OFF OFF
ON OFF
PUMP
PUMP HEATER
OPTIONAL
HOSE
HOSE
CYLINDER HEATER
OPTIONAL
TO SAFETY DEVICES
NO NO
SPRING RELEASE SAFETY SWITCHES
LEGEND
WHITE
RED
YELLOW
GREEN
BLUE
BLACK
ORANGE
BROWN
PURPLE
GREY
PINK
DATE
REVISIONS
IDEAL MANUFACTURING INC.
2011 HARNISH BLVD BILLINGS, MT. 59101
PHONE: 406-656-4363 FAX 406-656-4363
HYJD-DC-25 TILT-A-WAY ROAD GATE
24 VOLT DC
MASTER GATE
NO SCALE
DATE: 12-14-2007
SHEET 1 OF 1
DWG BY THH
DWG # HYJD-DC-25M

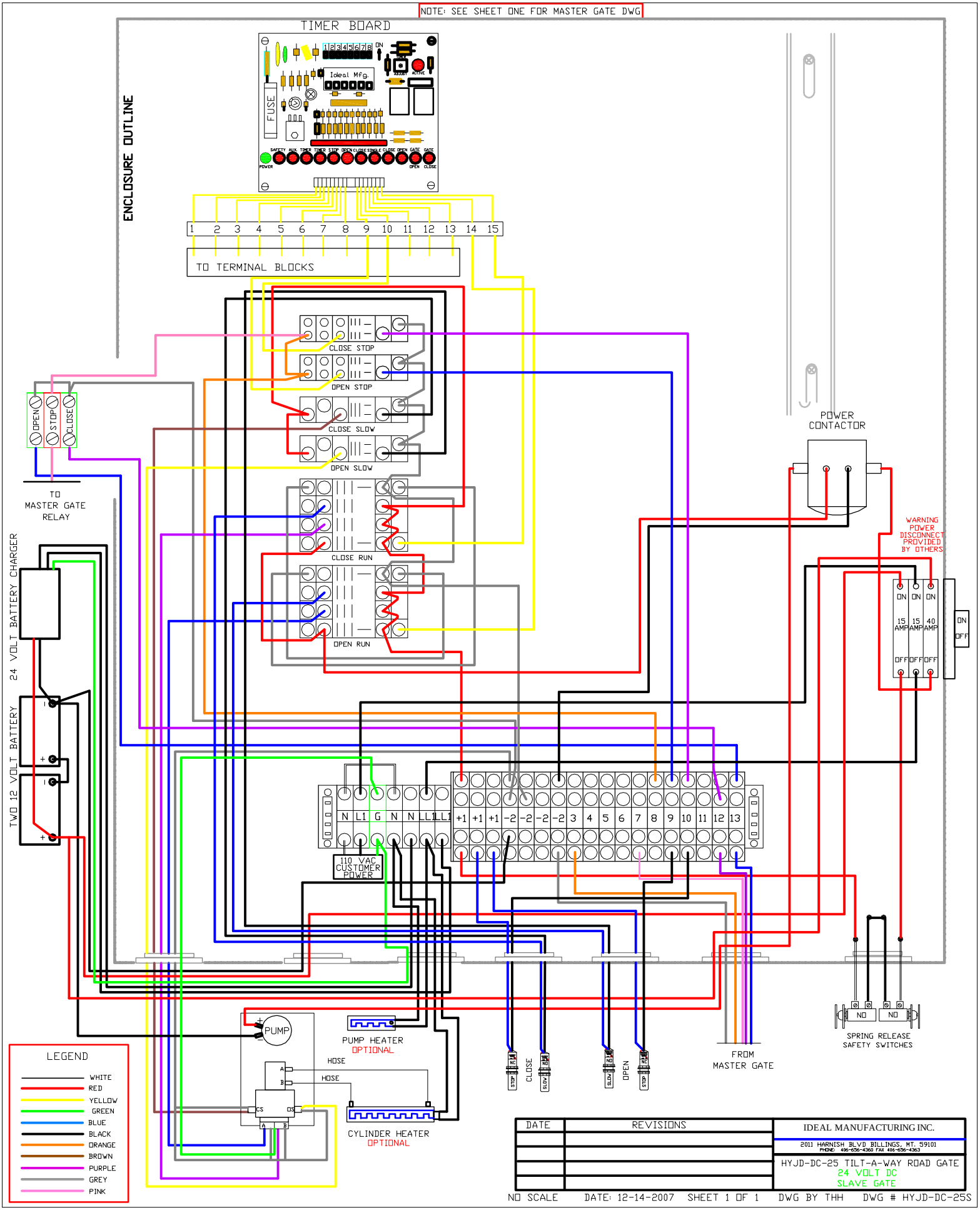
NOTE: SEE SHEET ONE FOR MASTER GATE DWG
TIMER BOARD
ENCLOSURE OUTLINE
FUSE
Ideal Mfg.
1 2 3 4 5 6 7 8 9 10 11 12 13 14 15
TO TERMINAL BLOCKS
CLOSE STOP
OPEN STOP
CLOSE SLOW
OPEN SLOW
CLOSE RUN
OPEN RUN
OPEN
STOP
CLOSE
TO MASTER GATE RELAY
24 VOLT BATTERY CHARGER
TWO 12 VOLT BATTERY
POWER CONTACTOR
WARNING POWER DISCONNECT PROVIDED BY OTHERS
ON ON ON
15 AMP 15 AMP 40 AMP
OFF OFF OFF
ON OFF
N L1 G N N L1 L1 L1
+1 +1 +1 -2 -2 -2 -2 3 4 5 6 7 8 9 10 11 12 13
110 VAC CUSTOMER POWER
PUMP
PUMP HEATER OPTIONAL
HOSE
HOSE
CYLINDER HEATER OPTIONAL
CLOSE
OPEN
FROM MASTER GATE
NO NO
SPRING RELEASE SAFETY SWITCHES
LEGEND
WHITE
RED
YELLOW
GREEN
BLUE
BLACK
ORANGE
BROWN
PURPLE
GREY
PINK
DATE
REVISIONS
IDEAL MANUFACTURING INC.
2011 HARNISH BLVD BILLINGS, MT. 59101
PHONE: 406-656-4360 FAX 406-656-4363
HYJD-DC-25 TILT-A-WAY ROAD GATE
24 VOLT DC
SLAVE GATE
NO SCALE
DATE: 12-14-2007
SHEET 1 OF 1
DWG BY THH
DWG # HYJD-DC-25S

HYDRAULIC TILT-A-WAY
OPERTOR FIELD INSTALLATION
DRAWING RGHY-3002
HYJD-DC-25 & HYJD-DC-25E

REF. NO.	DESCRIPTION

Note: If gate does not operate on first try, but hydraulic pump runs switch 2 power lines on motor to reverse pump rotation.

1 Control pedestal **HYJD-DC-25**
Concrete support slab. Minimum dimensions 11ô0ò long x 4ô0ò wide x 1ô6ò thick.

1 Control pedestal **HYJD-DC-25E**
Concrete support slab Minimum dimensions 12ô0ò long x 4ô0ò wide x 1ô6ò thick.
To be placed on firm soil or compacted fill, reinforced with #4 rebar each way; and cement piling dug to frost line by purchaser
NOTE: Will withstand and estimated 100 MPH wind in most soil conditions.

2 Electrical conduit area. Stub in electrical supply, 20 Amp service.
3 Four anchor bolts ¾ò diameter with 2ò projection. Set in slab or expansion type.
4 Two base plates, furnished loose with pedestal. Level with grout and bolt in place.
5 Four corner field welds. Place pedestal on base plates with exact alignment and weld.

TILT-A-WAY
HYDRAULIC OPERATOR INSTALLATION PROCEDURE FOR GATE THAT IS SHIPPED UNASSEMBLED DRAWING RGHY-3002

1. Remove all materials used for protection during shipment.
2. Find two base plates, place them over the anchor bolts of prepared foundation. Fasten base plates to concrete pad.
3. Place pedestal on to secured base plates. Align and level pedestal, tack weld in place to insure pedestal does not move when performing steps 4 through 9. Remove lifting hook.
4. Open rear access door to expose spring tension adjustment screws.
5. Find two fluid bypass valves, place in open position.
6. Back off spring tension screws to provide slack in tension cables. (1 5/8ò socket needed)
7. Rotate barrier carriage to down position. Remove pivot shaft with attached components. Install barrier and secure to vertical carriage post with three bolts and bolt at outer end of carriage horizontal channel.
8. Place plastic rub washer over pivot shaft collar on carriage. Align cylinder rod end bearing with collar and insert pivot shaft from far side. Secure with flat washer, lock washer and bolt.
9. Tighten spring tension screws while inspecting cables for proper wrap around balance sheaves. When slide members have reached marks indicated on tracks. Proper balance tension will have been achieved. If at a later date minor adjustment should be required, refer to balance system adjusting section.
10. Align gate for permanent position and secure pedestal to base plates with field welds at each corner.
11. Perform required electrical connections in accordance with diagrams shown in this manual.
12. Position fluid bypass valves to closed setting, close and secure access door.
13. If gate fails to function properly, contact manufacturerôs representative.

TILT-A-WAY
HYDRAULIC OPERATOR INSTALLATION PROCEDURE FOR GATE THAT IS SHIPPED ASSEMBLED DRAWING RGHY-3002

1. Remove all materials used for protection during shipment.
2. Find base plates , place them over the anchor bolts of prepared foundation, fasten base plates to concrete pad.
3. Place operator and barrier on to secured base plates. Tack weld in place and remove lifting hook.
4. Align gate for permanent position and secure pedestal to base plates with field welds at each corner.
5. Perform required electrical connections in accordance with diagrams shown in this manual.
6. Position fluid bypass valves to closed setting, close and secure access door.
7. If gate fails to function properly, contact manufacturerôs representative.

MODEL HYJD-DC-25
MODEL HYJD-DC-25E
HYDRAULIC VERTICAL PIVOT GATE

NOTE: STUB IN 115 VAC SINGLE PHASE
20 AMP SERVICE SUGGESTED MINIMUM (3 WIRE SERVICE REQUIRED)
COPPER WIRE REQUIRED

CAP	LENGTH OF CIRCUIT IN FEET														
AMPS	20'	30'	40'	50'	60'	70'	80'	90'	100'	120'	140'	160'	180'	200'	240'
20	12	12	10	120	8	8	8	6	6	6	5	5	4	4	3

NOTE: FOR CIRCUIT LENGTH GREATER THAN 240'
CONSULT A LICENSED ELECTRICIAN FOR PROPER WIRE SIZE

NOTE: IF BARRIER HEIGHT EXCEEDS 8' TALL
USE HYJD-DC-25E DIMENSIONS FOR FOUNDATION

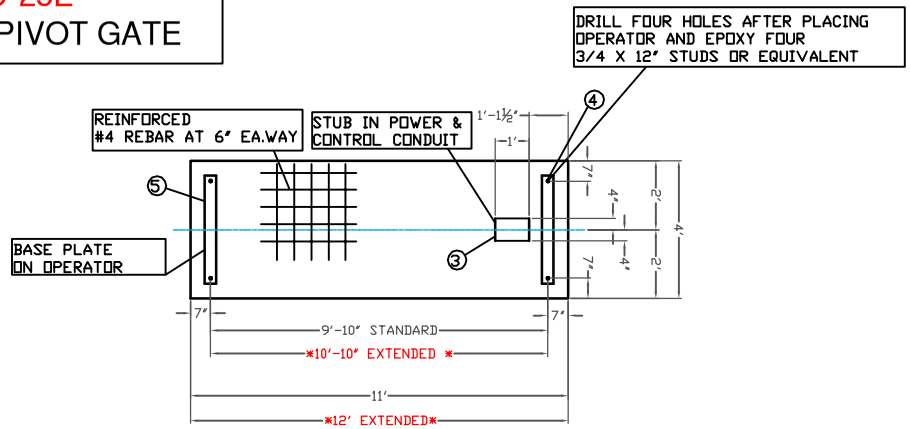

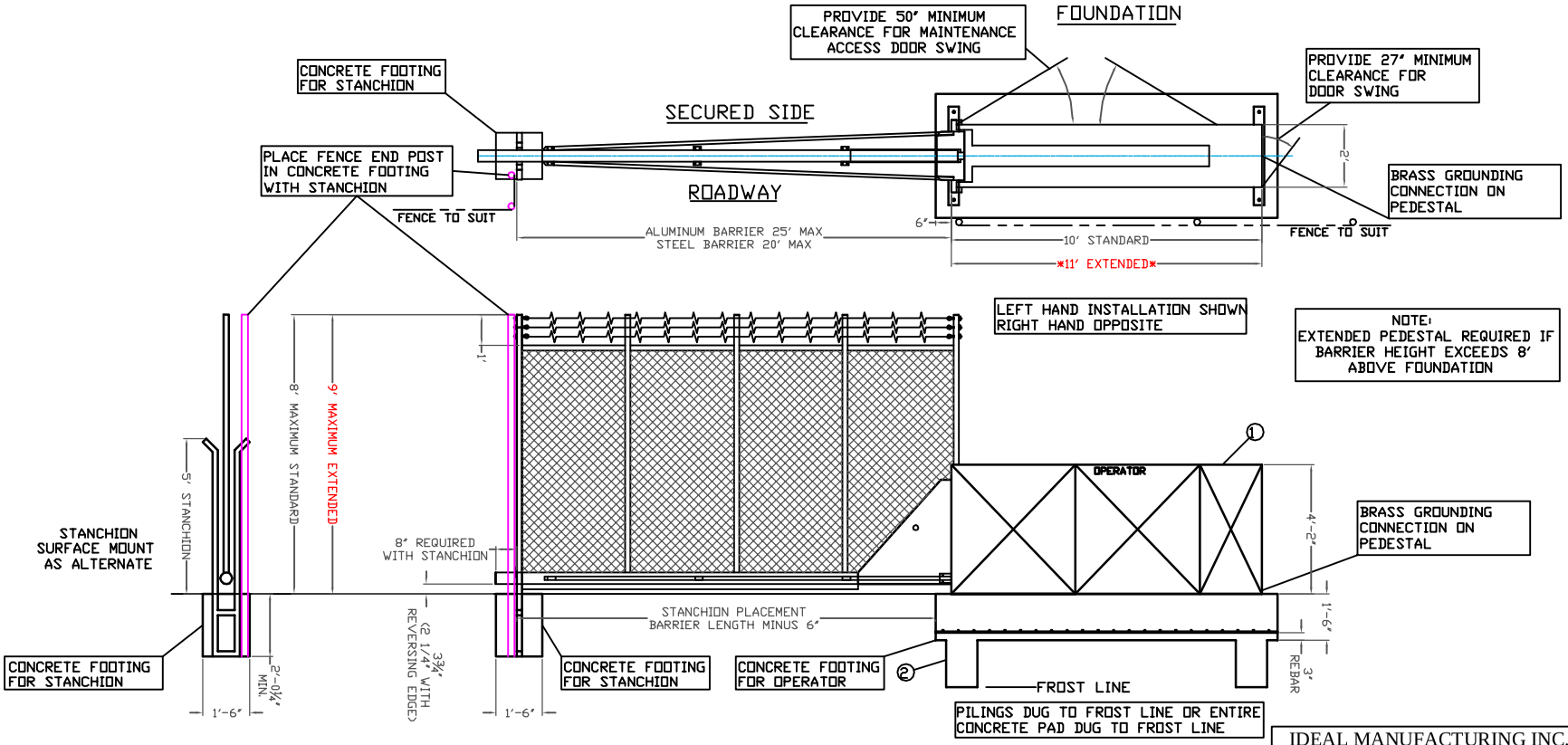

NOTE: FOR ADDITIONAL GROUND CLEARANCE RAISE FOUNDATION

NOTE: BARRIER STYLE WITHIN DIMENSIONAL LIMITS AS PER CUSTOMER SPECIFICATIONS. FOR GREATER ROADWAY SPAN INSTALL OPPOSING GATES PROVIDE 1" GAP.

07-09-2012

IDEAL MANUFACTURING INC.
2011 HARNISH BLVD. BILLINGS, MT 59101
PHONE: (406) 656-4360

VERTICAL PIVOT GATE
BASIC DIAGRAM
AUTO CAD DWG #2002-DC

TILT-A-WAY
HYJD-DC-25 & HYJD-DC-25E
HYDRAULIC OPERATOR BALANCE SYSTEM ADJUSTMENT
DRAWING RGHY-3003

TILT-A-WAY road gate must be balanced to offer the least amount of resistance against movement at both up and down extreme positions or combination of both.

Balance adjustment is accomplished by cable tension, cable sheave position or combination of both.

Two cable systems are incorporated and any adjustments preformed at one side must be duplicated on the opposite side.

SAFETY WARNINGS-VERY IMPORTANT

1. **Before performing any maintenance or adjustment, open main power disconnect switch located adjacent to control panel enclosure. Prior to performing any adjustment, hydraulic fluid bypass valves must be placed in open position.**
2. **Any adjustment preformed on cable sheave must be preceded by the release of all cable tension at spring connections.**

CONDITIONS AND SOLUTIONS

1. **Condition: Gate heavy at both up and down positions.**
   Solution: Increases cable tension.
2. **Condition: Gate light at both up and down positions**
   Solution: Decrease cable tension.
3. **Condition: Gate heavy at down position only.**
   Solution: Lower cable sheave and increase cable tension.
4. **Condition: Gate light at down position only.**
   Solution: Raise cable sheave and decrease cable tension.
5. **Condition: Gate heavy at up position only.**
   Solution: Raise cable sheave and decrease cable tension.
6. **Condition: Gate light at up position only.**
   Solution: Lower cable sheave increase cable tension.
7. **Condition: Gate heavy at intermediate positions.**
   Solution: Move cable sheave forward.
8. **Condition: Gate light at intermediate positions.**
   Solution: Move cable sheave rearward.

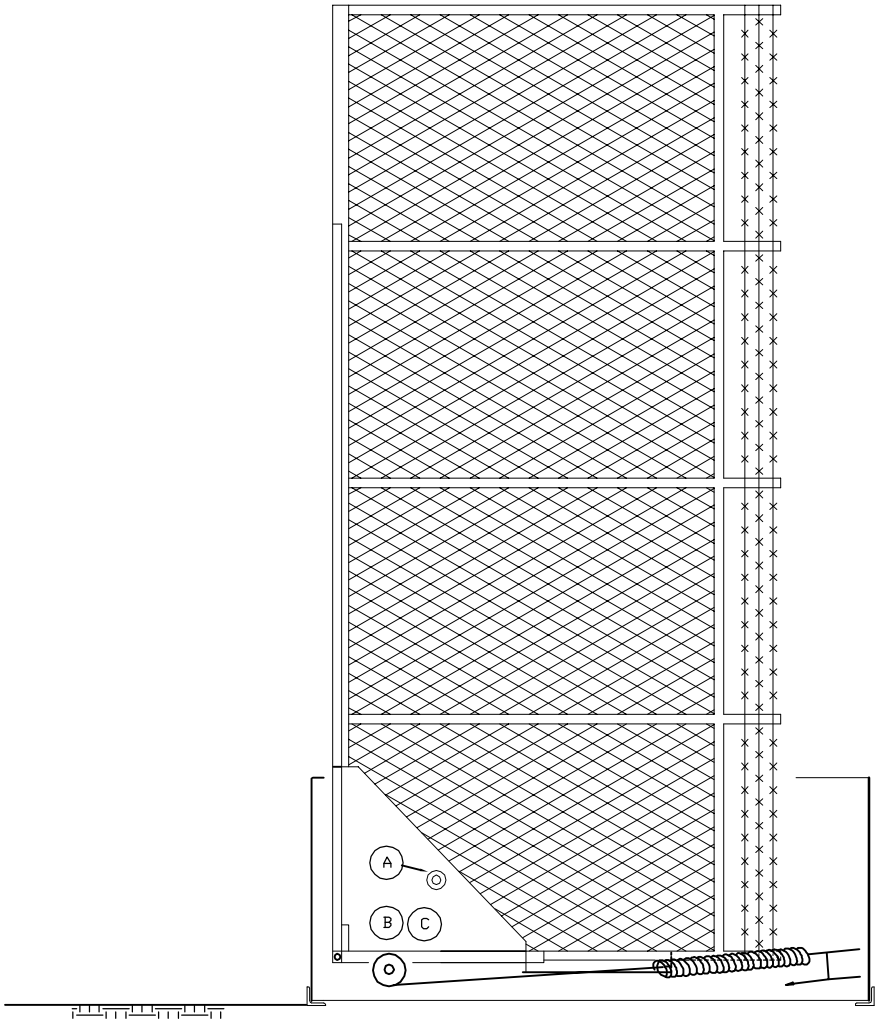

UP

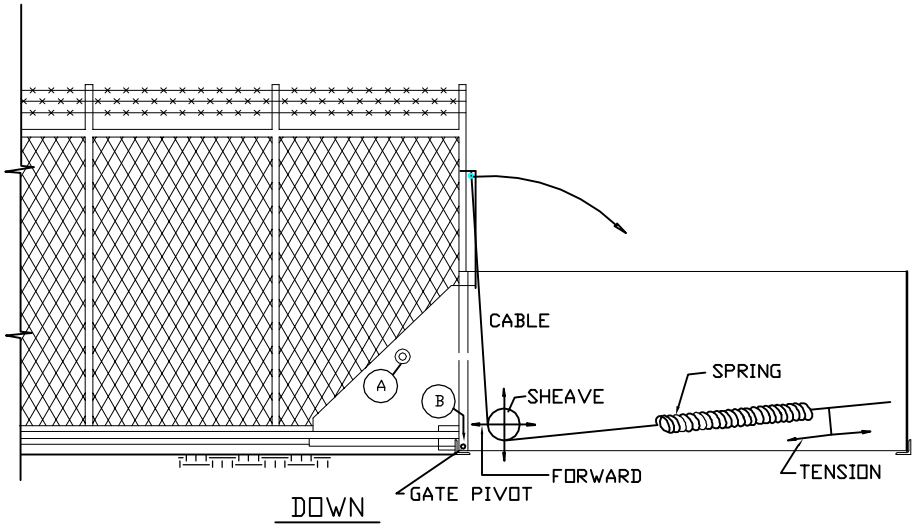

DOWN

HYJD-DC-25 & HYJD-DC-25E TILT-A-WAY HYDRAULIC OPERATOR
BALANCE SYSTEM ADJUSTMENT

IDEAL MANUFACTURING INC.

RGHY-3003

TILT-A-WAY
HYDRAULIC OPERATOR GENERAL ARRANGEMENT
HYJD-DC-25 & HYJD-DC-25E
RGHY-3006

REF NO.	DESCRIPTION	
1	Control Pedestal Frame	For covering. See Drawing RGHY-3005 Page 11
2	Barrier Unit	See Drawing RGHY-3004 Page 20
3	Hydraulic Pump & Reservoir	See Drawing RGHY-3015 Page 27 & Page 31
4	Electrical Control Enclosure	See Drawing HYJD-DC-25 Page 7
5	Barrier Carriage	See Drawing RGHY-3007 Page 17
6	Balance System Cable Guide Assembly.	See Drawing RGHY-3009 Page 21
7	Balance System Cable Guide Assembly.	See Drawing RGHY-3010 Page 22
8	Balance System Tension Cable	See Drawing RGHY-3009 Page 21
9	Balance system Tension Spring	See Drawing RGHY-3012 Page 25
10	Balance System Spring Tension Adjusting Limit	See Drawing RGHY-3011 Page 25
11	Balance System Spring Tension Release	ñPower Off Safety Switchò. See Drawing RGHY-3013 Page 25
12	Hydraulic Actuating Cylinder	See Drawing RGHY-3008 Page 19
13	Cylinder Control Actuating System	See Drawing RGHY-3008 Page 19

TILT-A-WAY
RECOMMENDED GENERAL MAINTENANCE
RGHY-3006

Check interior of pedestal for any accumulation of trash caused by blowing wind and remove.

On regular basis the following maintenance steps should be preformed **(Monthly)**.

1. Check hydraulic fluid level with site gauge on oil reservoir. Level to be approximately 2 ½ ñ below the top of the pipe. If required, add Dextron #4 hydraulic fluid ñsame as automatic transmission fluidò. Check with cylinder retracted.

2. Clean and lubricate spring tension screws with ñgeneral purpose greaseò to prevent rusting.

3. Lubricate with ñgeneral purpose grease such as a bearing greaseò all pints equipped with zerk fitting.

    A. Barrier carriage pivot bearing.
    B. Cylinder anchor pivot.
    C. Cylinder rod end pivot bearing.

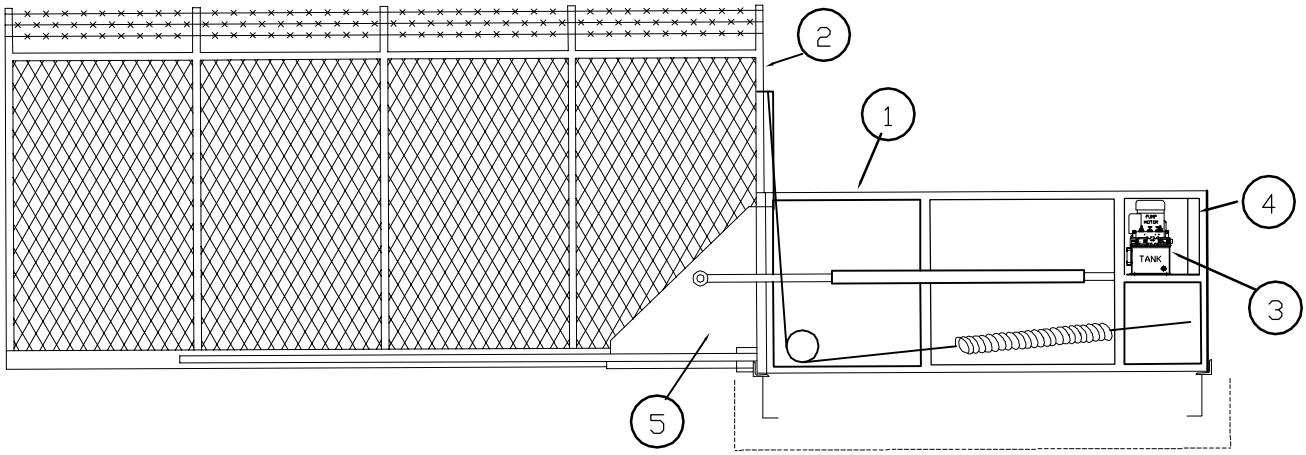

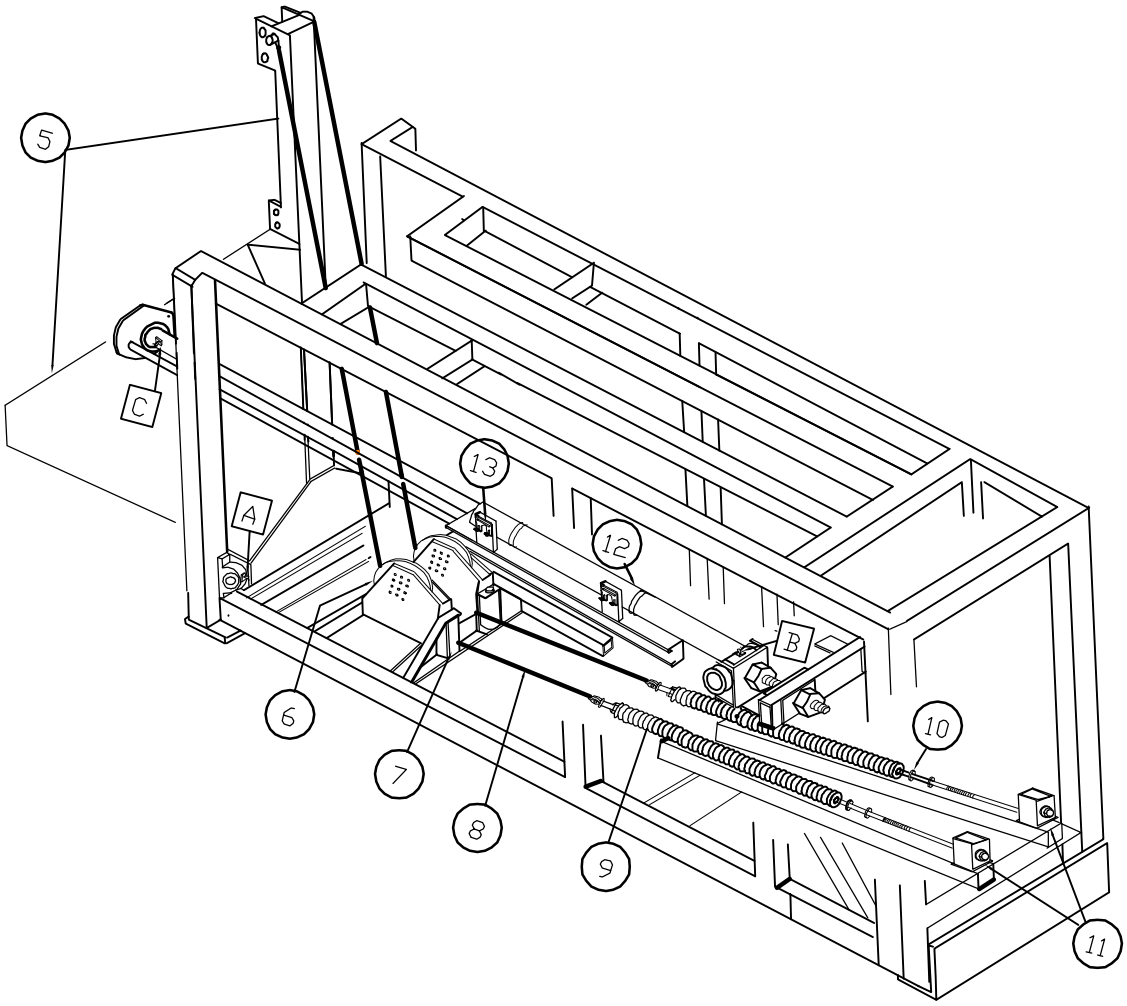

TILT-A-WAY ROAD GATE
HYJD-DC-25 & HYJD-DC-25E
CONTROL PEDESTAL
GENERAL ARRANGEMENT

IDEAL MANUFACTURING INC.

RGHY-3006

TILT-A-WAY
HYDRAULIC OPERATOR
BARRIER CARRIAGE

DRAWING RGHY 3007

REF NO.	PART NO.	DESCRIPTION	REQ'D NO.
1A	FGO147-A	Barrier Carriage Frame (standard)	1
1B	FGO147-B	Barrier Carriage Frame (short)	1
2	TWO101	Pillow Block Bearing	2
3	N/A	1/2ò Hex Nut	4
4	N/A	1/2ò Lock washer	4
5	N/A	1/2ò SAE Flat Washer	4
6	N/A	1/2ò X 4 1/2ò Flat head Bolt	4
7	N/A	1ò SAE Flat Washer	4
8	ID1006	3/16ò X 1 1/2ò Stainless Cotter Pin	2
9	N/A	5/8ò Hex Nut	3-(1A) 1-(1B)
10	N/A	5/8ò Lock washer	3-(1A) 1-(1B)
11	N/A	5/8ò x 3 1/4ò Hex Head Bolt	3-(1A) 1-(1B)
12	N/A	3/8ò Hex Nut	8
13	N/A	3/8ò Lock washer	8
14	N/A	3/8ò X 2 1/4ò Hex Head Bolt	8
15	N/A	1/2ò X 5 1/2ò Hex head Bolt	1
16	N/A	½ò Nylock Nut	1
17	N/A	3/8òX 1 1/2ò Hex Head Bolt	2
18	N/A	3/8ò Flat Washer	4

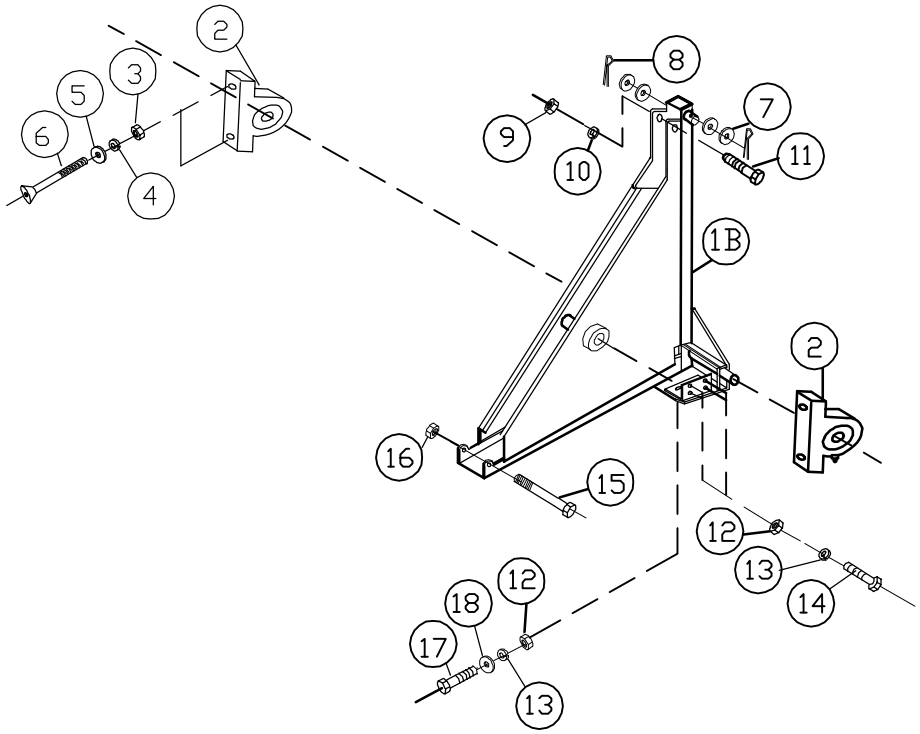

TILT-A-WAY ROAD GATE BARRIER - SHORT CARRIAGE

TILT-A-WAY ROAD GATE BARRIER- STANDARD CARRIAGE

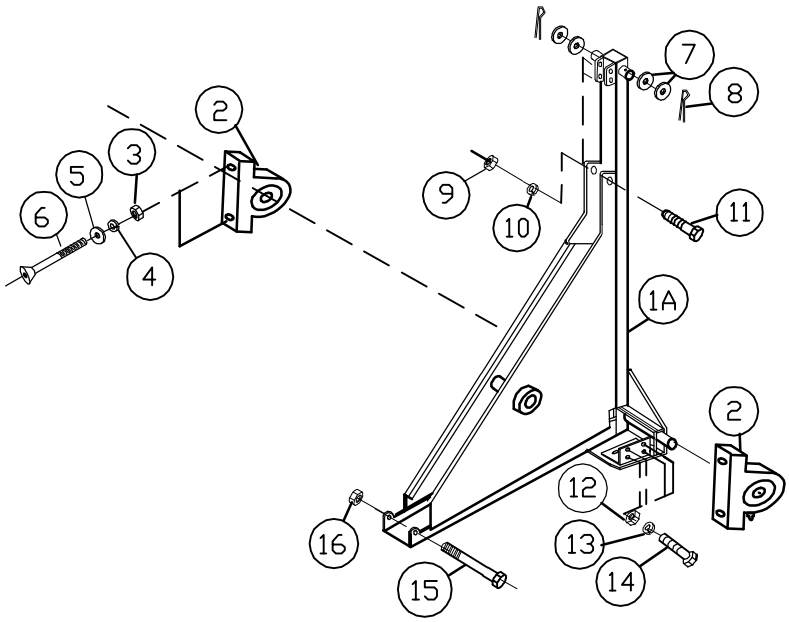

TILT-A-WAY
HYDRAULIC OPERATOR
ACTUATING CYLINDER WITH COMPONENTS
HYJD-DC-25 & HYJD-DC-25E
RGHY-3008

REF NO.	PART NO.	DESCRIPTION	REQ'D NO.
1	TWO400	Hydraulic Cylinder	1
1A	TWO401	Hydraulic Cylinder Extended Operator	1
2	FGO187	Foot Clevis Assembly	1
3	FGO118	Foot Clevis Pivot Shaft	1
4	TWO118	Rod End Pivot Bearing	1
5	FGO198	Rod End Pivot Shaft	1
6	N/A	Pivot Shaft Collar on Barrier Carriage (See Drawing RGHY 3007)	1
7	FGO199	Plastic Rub Washer	1
8	FGO200	Bearing Sleeve Pressure Washer	1
9	FGO401	Cylinder Actuator Track	1
10	TWO119	Actuator Track Clamp	2
11	FGO400	Adjustable Mount Plate	2
12	PEO680	Slow Down Proximity Switch NO	2
13	PEO681	Limit Proximity Switch NC	2
14	FGO402	Control Actuator Rod	1
15	FGO194	Plastic Runner Bearing	2
16	FGO208	Shaft Pressure Washer	1
17	ID1030	Grease Zert	1
18	ID1031	ñEò Ring	4
19	FGO211	Hydraulic Hose Support	1
20	FGO206	Hydraulic Hose Clamp	1
21	NA	1/2ò Lock washer	2
22	N/A	1/2òï 13 X 1ò Hex Head Bolt	2
23	N/A	3/8ò Lock washer	5
24	N/A	3/8ò Hex Nut	5
25	NA	1/4ñ X 1 1/4ò Hex Head Bolt	5
26	NA	1 1/2ò Hex Nut	3
27	NA	1/4ò X 1ò Hex Head Bolt	1
28	NA	1/4ò Lock washer	9
29	NA	1/4ò SAE Flat Washer	8
30	NA	1/4ò Hex Nut	9
31	N/A	3/4ò Lock washer	1
32	N/A	3/4ò Hex Nut	2

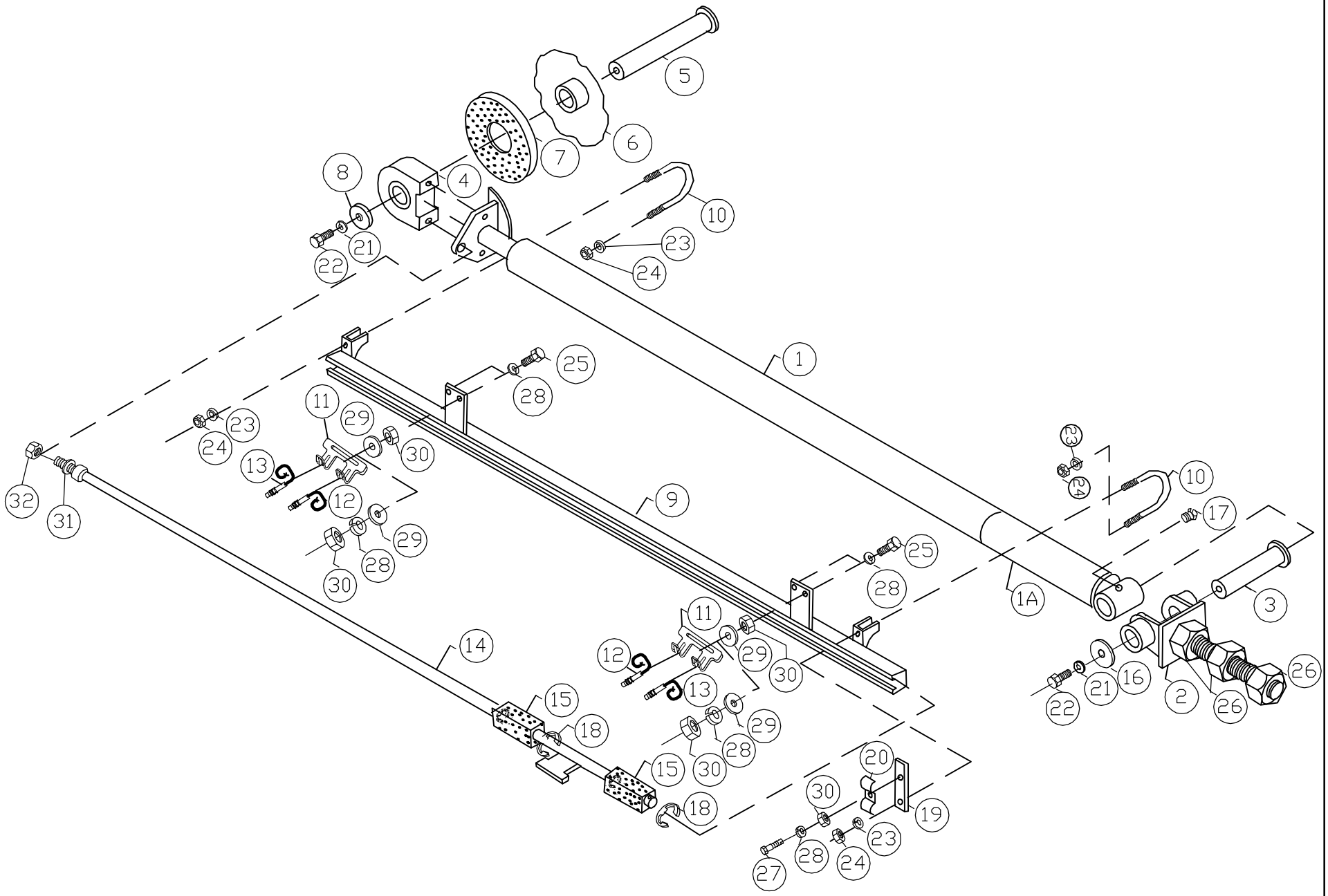

IDEAL MFG INC

ACTUATOR CYLINDER WITH COMPONENTS

RGHY-3008

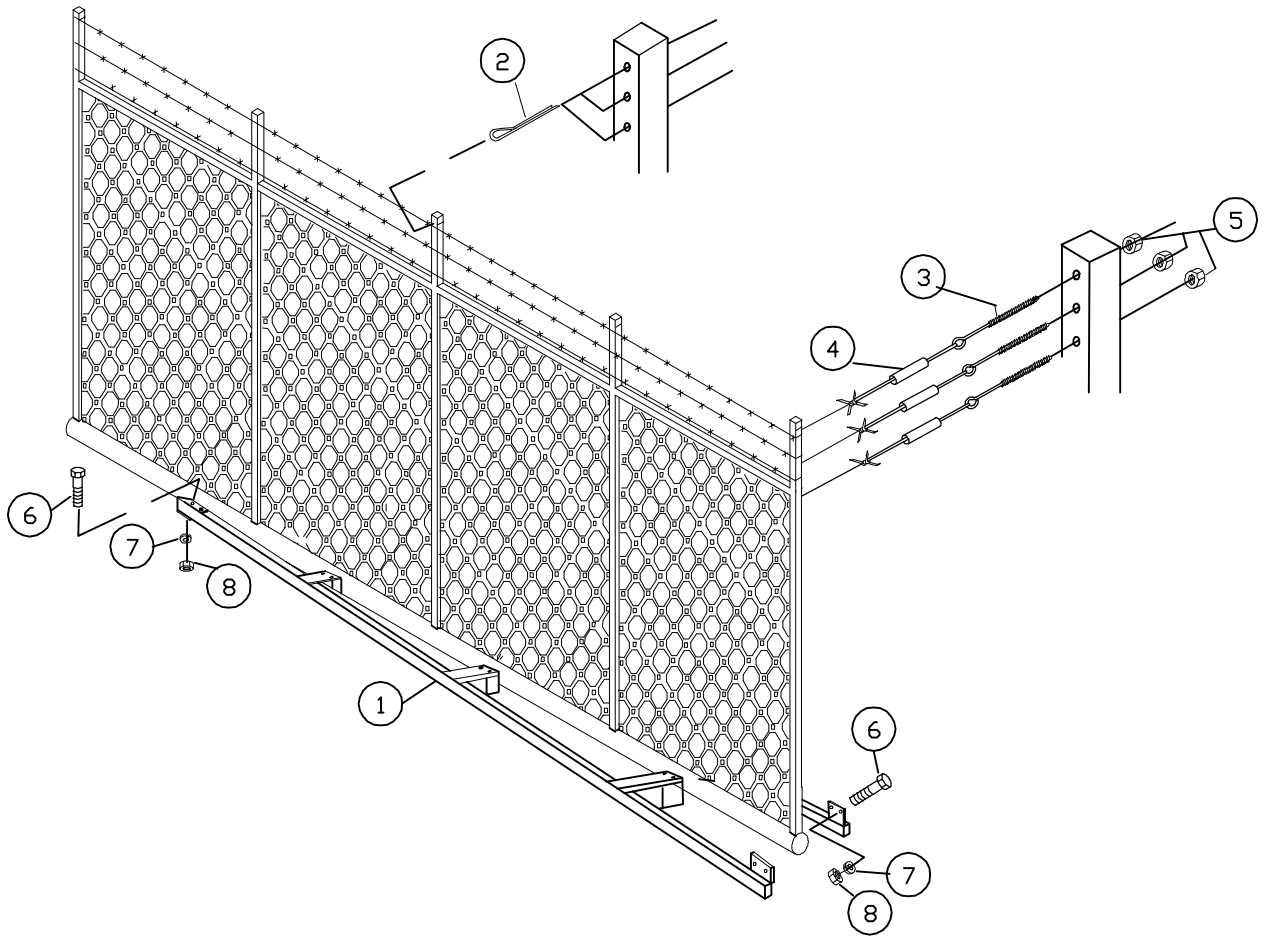

TILT-A-WAY HYDRAULIC ROAD GATE BARRIER UNIT
HYJD-DC-25 & HYJD-DC-25E

REF NO.	PART NO.	DESCRIPTION	REQ NO
		Barrier serial # decal located on electrical enclosure	
		Barrier assemblies are manufactured from steel or aluminum material and in varied lengths and heights.	
1	FGO652 FGO651 FGO650	Long Sway Brace (20' to 25' long barrier) Intermediate Sway Brace (14' to 219' long barrier) Short Sway Brace (13' to 10' long barrier)	2
2	ID1066	3/16" x 2 1/2 Stainless Steel Cotter Pin - 3 per inside tube	
3	ID1063	5/16 x 4" Eye Bolts (3 per end)	6
4	ID1064	Wire Crimp	6
5	N/A	5/16" Hex Nut	6
6	N/A	3/8" x 2 1/4" Hex Bolt for Aluminum Brace or 3/8" x 2" Hex Bolt for Steel Brace	6
7	N/A	3/8" Lock Washer	6
8	N/A	3/8" Hex Nut	6

When contacting manufacturer regarding a TILT-A-Way gate, always provide complete serial number.

IDEAL MANUFACTURING INC. 7-9-2012 DWG # 3004

NOTE: When ordering cables, make sure you have the serial number in order for manufacturer to ship the right size cables.

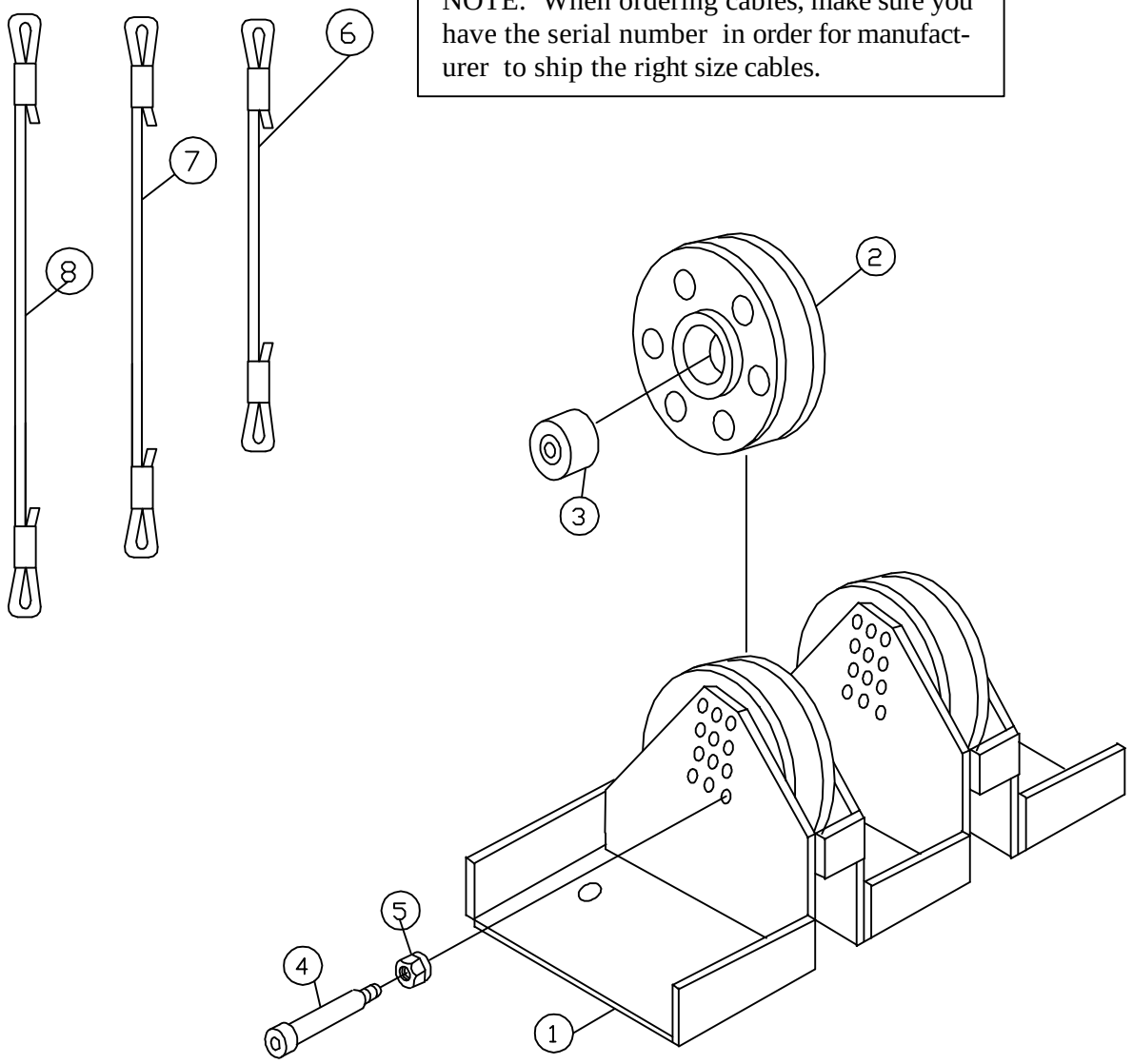

TILT-A-WAY HYDRAULIC ROAD GATE OPERATOR
HYJD-DC-25 & HYJD-DC-25E

BALANCE SYSTEM CABLE & SHEAVE

REF. NO.	PART NO.	DESCRIPTION	REQ. NO.
1	NA	Sheave Mount on Pedestal Frame	
2	TWO 105	Cable Sheave	2
3	TWO106	Bearing "Lock Tight"	2
4	TWO103	Sheave Shaft	2
5	NA	1/2" Lock Nut	2
6	TWO110-1	Tension Cable 72 1/2"	2
7	TWO110-2	Tension Cable 95 1/2"	2
8	TWO110-3	Tension Cable 107 1/2"	2

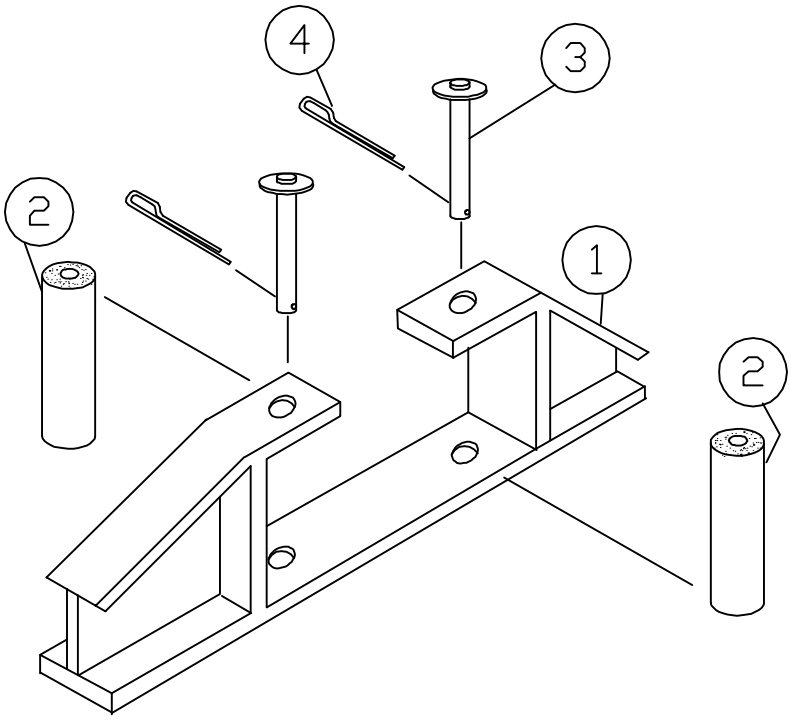

TILT-A-WAY HYDRAULIC ROAD GATE OPERATOR
HYJD-DC-25 & HYJD-DC-25E

BALANCE SYSTEM CABLE GUIDE

REF. NO.	PART NO.	DESCRIPTION	REQ. NO.
1	NA	Support Carriage on Pedestal Frame	
2	FGO127	Plastic Roller	2
3	FGO128	Shaft	2
4	IDI006	3/16" x 1 1/2" Stainless Cotter Pin	2

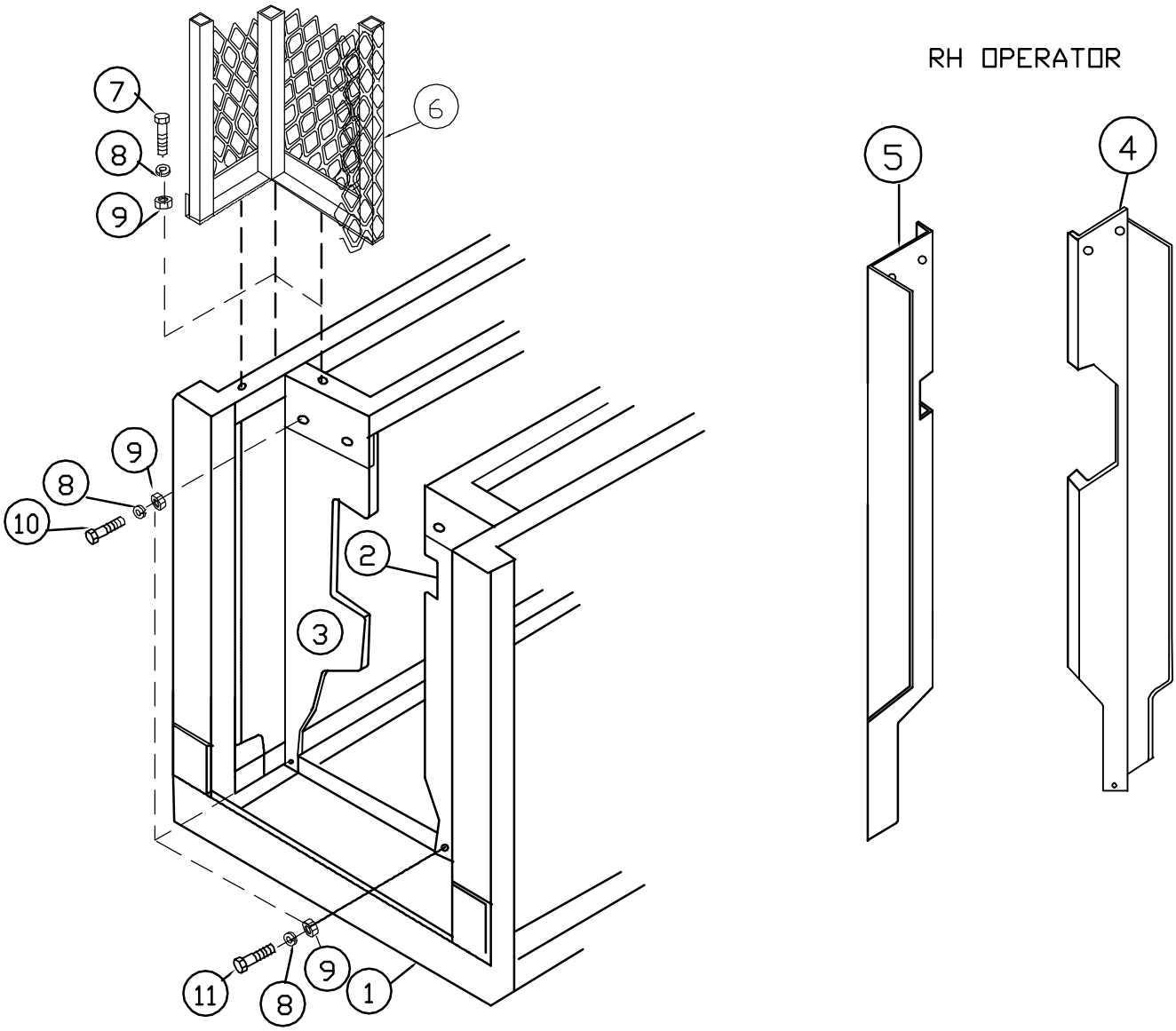

TILT-A-WAY HYDRAULIC ROAD GATE ACCESS GUARDS
HYJD-DC-25 & HYJD-DC-25E

REF NO.	PART NO.	DESCRIPTION	REQ NO
1	N/A	Pedestal Frame	1
2	FGO404	Left Inner Guard for Right Hand Gate (Left Hand Gate shown)	1
3	FGO405	Right Hand Inner Guard for Right Hand Gate	1
4	FGO404A	Left Inner Guard for Left Hand Gate (Left hand gate opposite of one shown)	1
5	FGO405A	Right Inner Guard for Left Hand Gate(Left hand gate opposite of one shown)	1
6	FGO175	Outer Guard Aluminum Amplimesh	1
7	NA	3/8" x 2 3/4" Hex Head Bolt	2
8	N/A	3/8" Lock Washer	8
9	N/A	3/8" Hex Nut	8
10	N/A	3/8" x 3/4" Hex Head Bolt	4
11	N/A	3/8" x 1 1/2" Hex Head Bolt	2

TILT-A-WAY
HYDRAULIC OPERATOR
BALANCE SYSTEM SPRING TENSIONER UNIT
DRAWING RGHY 3011
(2 ASSEMBLIES INCLUDED)

REF NO.	PART NO.	DESCRIPTION	REQ'D NO.
1	N/A	Pedestal Frame	
2	N/A	Safety Device Brackets (See Detail 2 & 18)	
3		Tension Spring	
	TWO137	500 Pound	2 Blue
	TWO138	1000 Pound	2 Yellow
	TWO139	1500 Pound	2 Orange
	TWO112	1750 Pound	2 Green
	TWO140	2000 Pound	2 Red
	TWO113	2500 Pound	2 White
4		Front Spring Connector	
	FGO168	500 or 1000 Pound Spring	2
	FGO170	1500 or 1750 Pound Spring	2
	FGO171	2000 or 2500 Pound Spring	2
5	TWO104	Clevis Pin	2
6		Rear Spring Connector	
	FGO139	500 or 1000 Pound Spring	2
	FGO157	1500 or 1750 Pound Spring	2
	FGO159	2000 or 2500 Pound Spring	2
7	TWO155	Threaded Bronze Hex Stock Encased in Item 6	2
8	FGO130	Tension Screw with End Nut Welded	2
9	TWO133	Safety Compression Spring	2
10	FGO131	Safety Nut	2
11	TWO108	Set Screw	2
12	N/A	½ò x 3ò Hex Head Bolt	2
13	N/A	½ò Lock Nut	2
14	N/A	1ò SAE Washer	4
15	FGO174	Pipe Spacer	2
16	ID1061	Cotter Pin	2
17	PEO611	Safety Switch	2
18	FGO403	Safety Release Bar	2

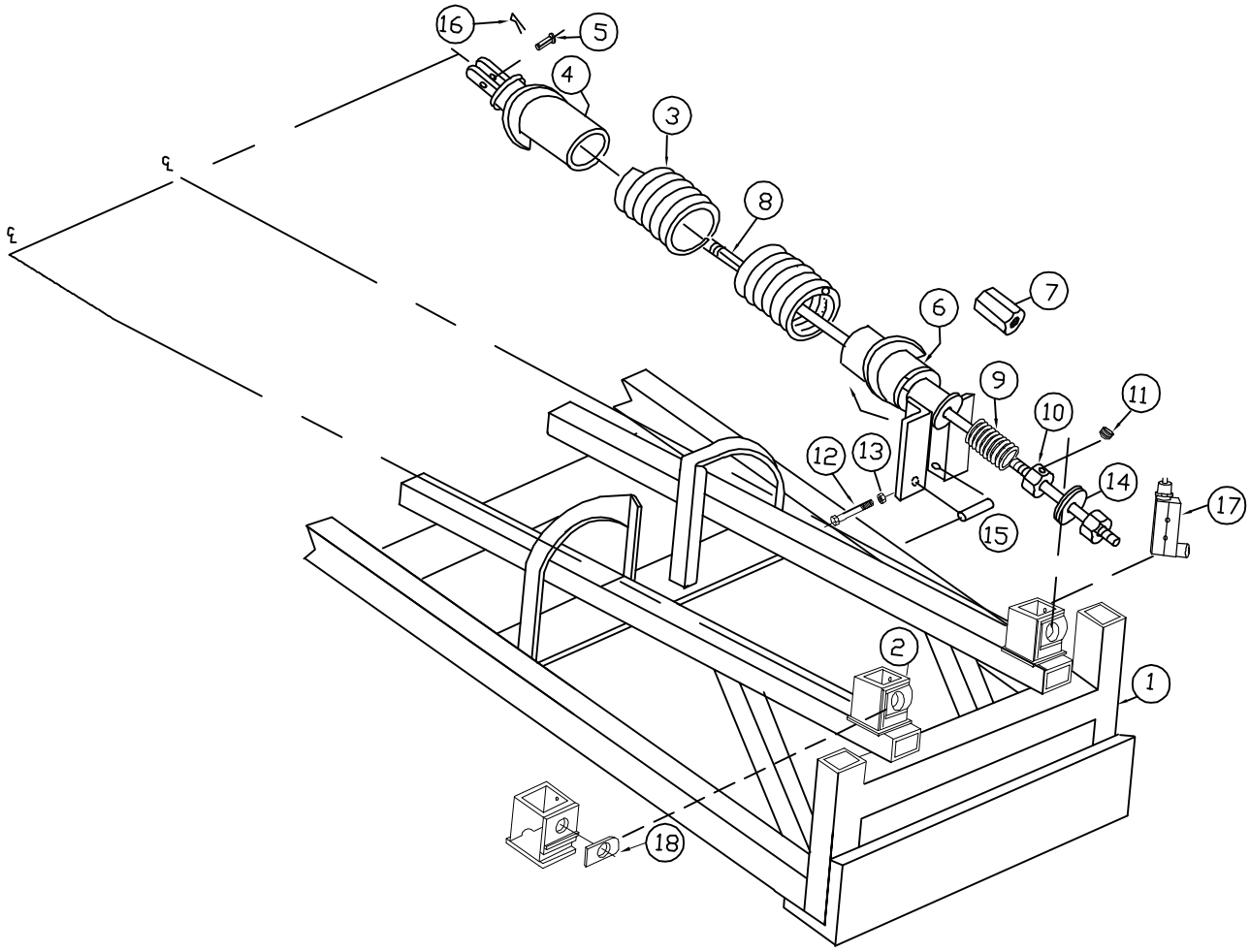

TILT-A-WAY HYDRAULIC ROAD GATE BALANCE SYSTEM
SPRING TENSIONER UNIT
HYJD-DC-25 & HYJD-DC-25E

TILT-A-WAY
HYDRAULIC OPERATOR
DC HYDRAULIC SYSTEM

DRAWING RGHY 3015-A

REF NO.	PART NO.	DESCRIPTION	REQ'D NO.
1	TWO400	Standard Hydraulic Cylinder	1
2	TWO417	DC Hydraulic Pump & Reservoir Set	1
3	TWO411	#8 O Ring Male NPT X 3/8ò JIC Adapter	2
4	TWO402	Short 3/8 Pressure Hose 36ò	1
5	TWO166	Long 3/8ò Pressure Hose 98ò	1
6	TWO154	90 degree Elbow	2
10		Manual Override Valves	2
11		Solenoid	1
12		Cylinder slow down open	1
13		Cylinder slow down closed	1
14		Sight Gauge	1
15		Directional Valves	2
16		Conduit to Electrical Box	1
17		Battery Shelf	1
18		Battery Charger Shelf	1
19	PEO675	Battery Charger I 2420 OB	1

EXTENDED HYDRAULIC SYSTEM
DRAWING RGHYE 3015-A

REF NO	PART NO	DESCRIPTION	REQ NO
7	TWO401	Extended Hydraulic Cylinder	1
8	TWO403	Extended Short 3/8ò Pressure Hose 46ò	1
9	TWO165	Extended Long 3/8ò Pressure Hose 107ò	1

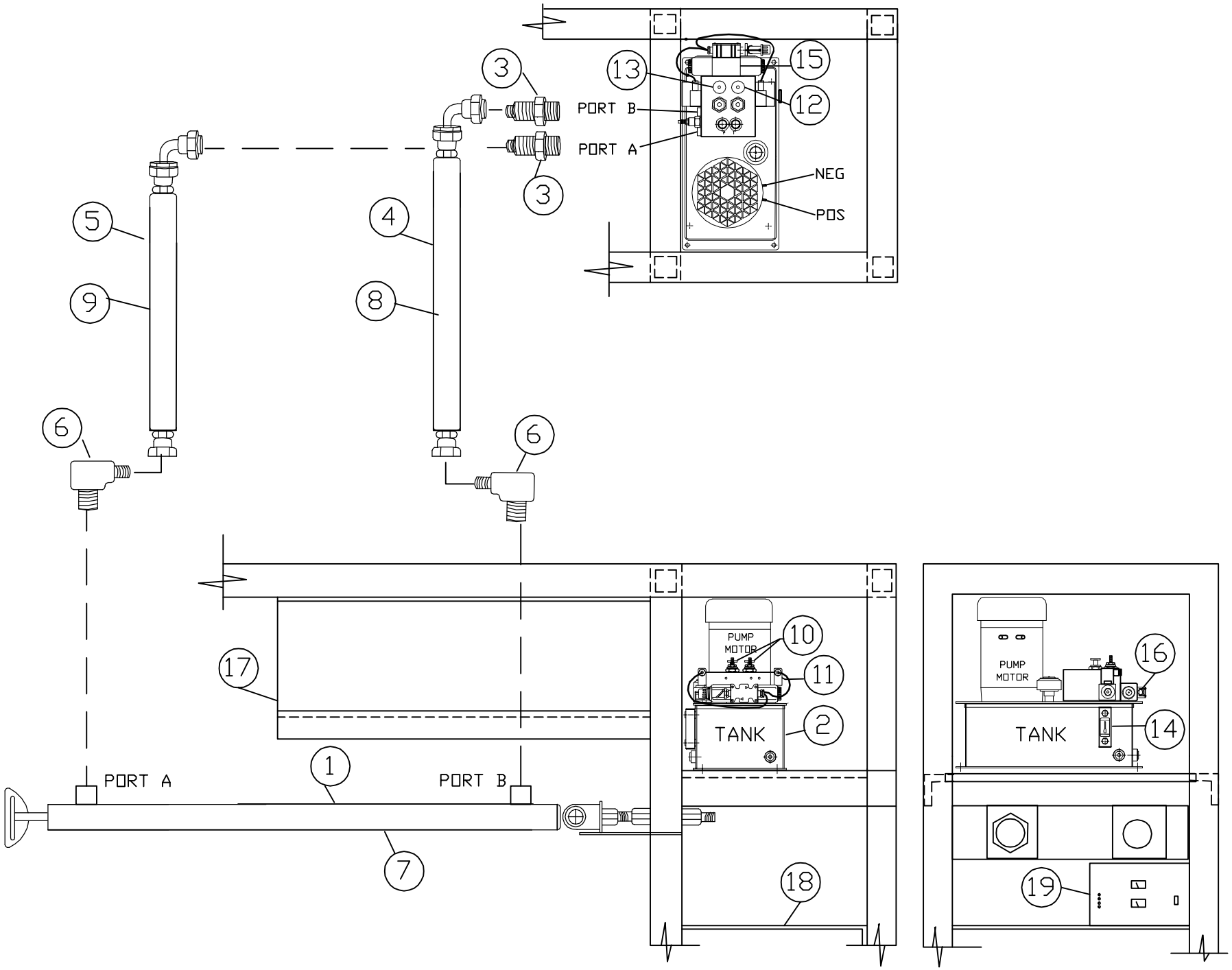

TILT-A WAY HYDRAULIC ROAD GATE 24 VOLT DC HYDRAULIC SYSTEM
HYJD-DC-25 & HYJD-DC-25E

IDEAL MANUFACTURING INC.

RGHY - 3015-A

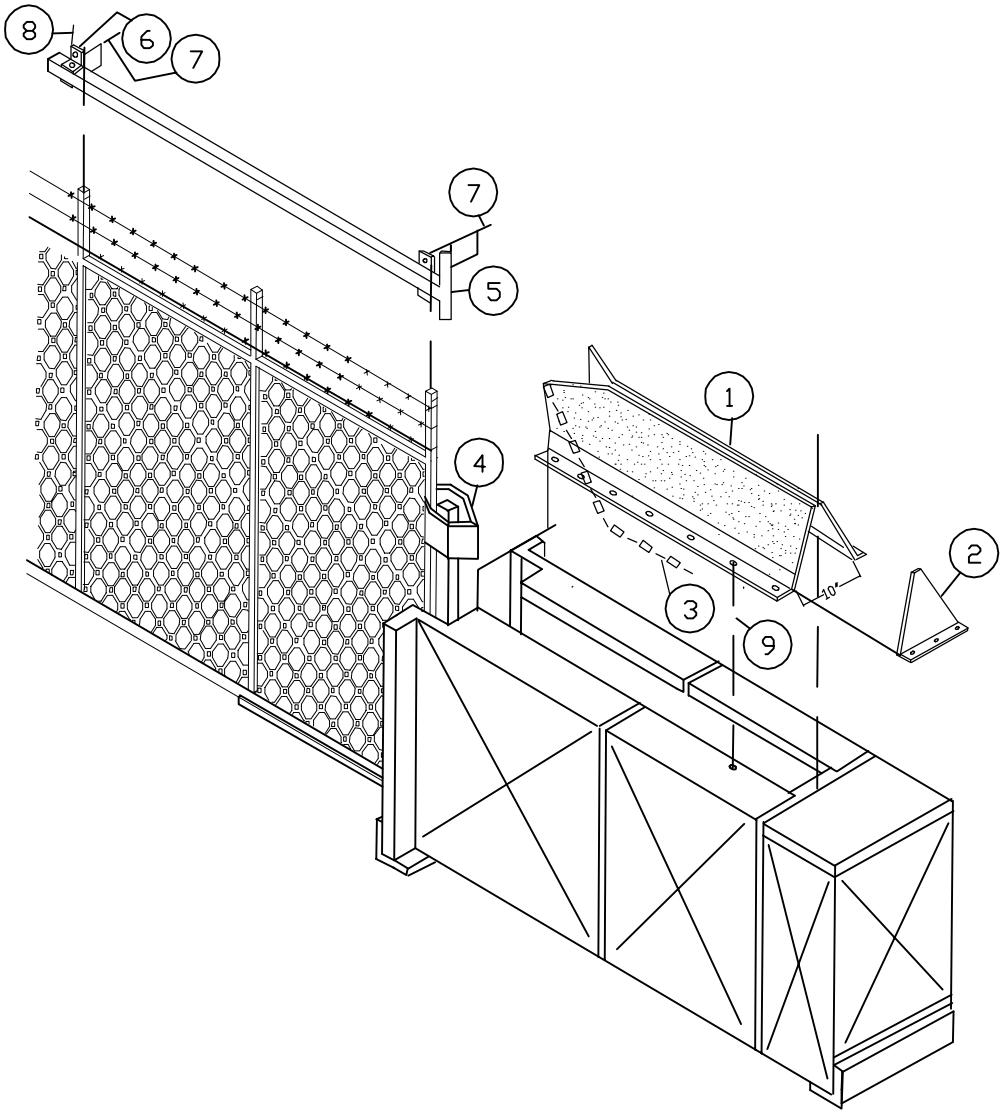

TILT-A-WAY HYDRALIC ROAD GATE
WEATHER GUARD OVERHEAD PROTECTION
HYJD-DC-25 & HYJD-DC-25E

REF NO.	PART NO.	DESCRIPTION	REQ NO
1	FGO213	Right Hand Flexible Shroud Unit	1
	FGO109	Left Hand Flexible Shroud Unit	1
2	FGO203	Rear End Cap	1
3	TWO161	Front Spreader Chain with Extra Length for Adjustment	2
4	FGO204	Cable Connection Guard	1
5	FGO210	Barbed Wire Guard	1
6	FGO211	Barbed Wire Guard End Bracket	1
7	N/A	1/4" x 2 3/4" Bolt with Nut & Lock	4
8	N/A	1/4" x 1 3/4" Bolt with Nut & Lock Washer	1
9	N/A	#12 X 7/8" TEK Screws	req'd

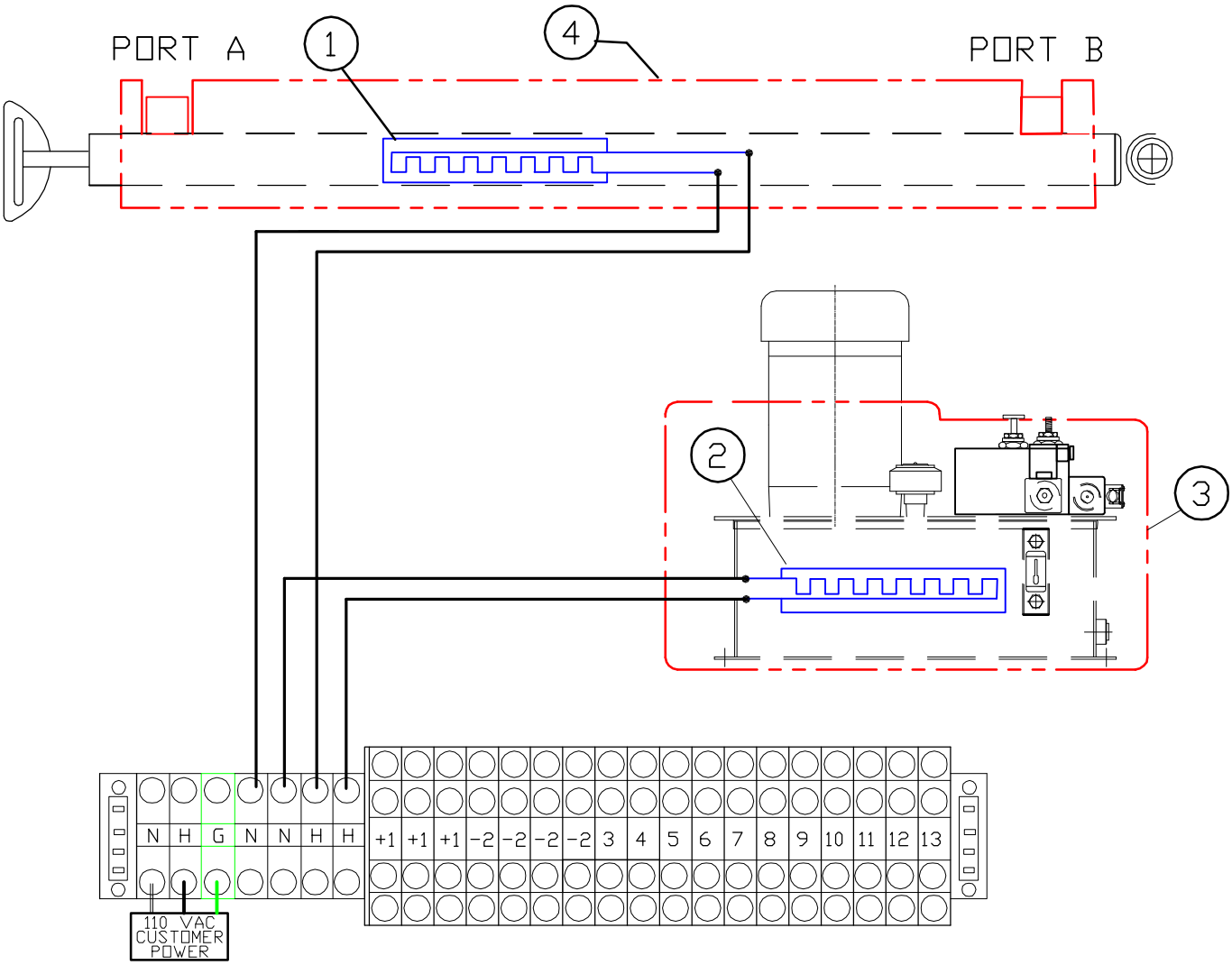

TILT-A-WAY HYDRAULIC ROAD GATE
HYJD-DC-25 & HYJD-DC-25E
COLD WEATHER PACKAGE

REF. NO.	PART NO.	DESCRIPTION	REQ. NO.
1	PEO247	Cylinder Heating Strip With Thermostat	1
2	PEO249	Pump Heating Strip With Thermostat	1
3	PEO420	Hydraulic Pump & Reservoir Insulating Cover	1
4	PEO421	Cylinder Insulating Cover	1

IDEAL MANUFACTURING INC.

DWG # RGHY - 3015B

TILT-A-WAY
HYDRAULIC OPERATOR
BILL OF MATERIALS
24 VDC POWER UNIT LAYOUT

PART NO.	DESCRIPTION	REQ'D NO.
TWO446	Tank	1
TWO447	Tank Lid	1
TWO442	Sight Gauge	1
TWO417	Hydraulic Pump	1
TWO433	Lovejoy Coupling (pump half)	1
TWO434	Lovejoy Coupling (motor half)	1
TWO435	Lovejoy Insert	1
TWO436	24 Volt DC Electric Motor	1
TWO436A	Brush 24 Volt DC Electric Motor	2
TWO443	Tank Breather	1
TWO445	Suction Strainer	1
TWO437	Directional Valve 24 VDC (D03 Valve)	1
TWO437A	Directional Valve 24 VDC Coil	2
TWO438A	Needle Valve with Knob	2
TWO438	Needle Valve without Knob	2
TWO439	Solenoid Valve, 2W/2P	2
TWO439A	Solenoid Valve Coil 24 VDC	2
TWO440	Load Holding Valve	1
TWO441	Relief Valve (set @ 400 psi)	1
TWO444L	Connector with Wire (left side)	1
TWO444R	Connector with Wire (right side)	1

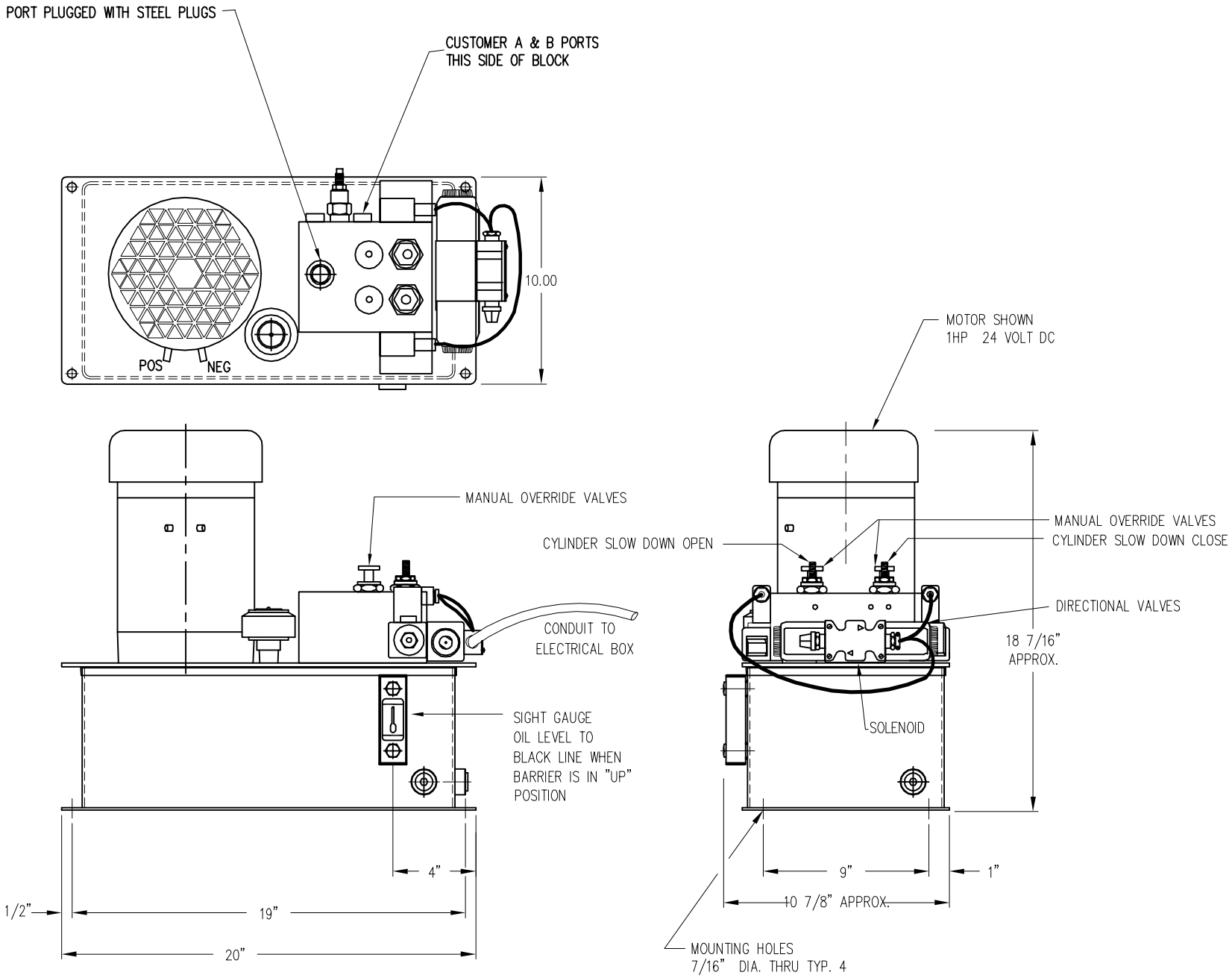

24 VDC POWER UNIT LAYOUT

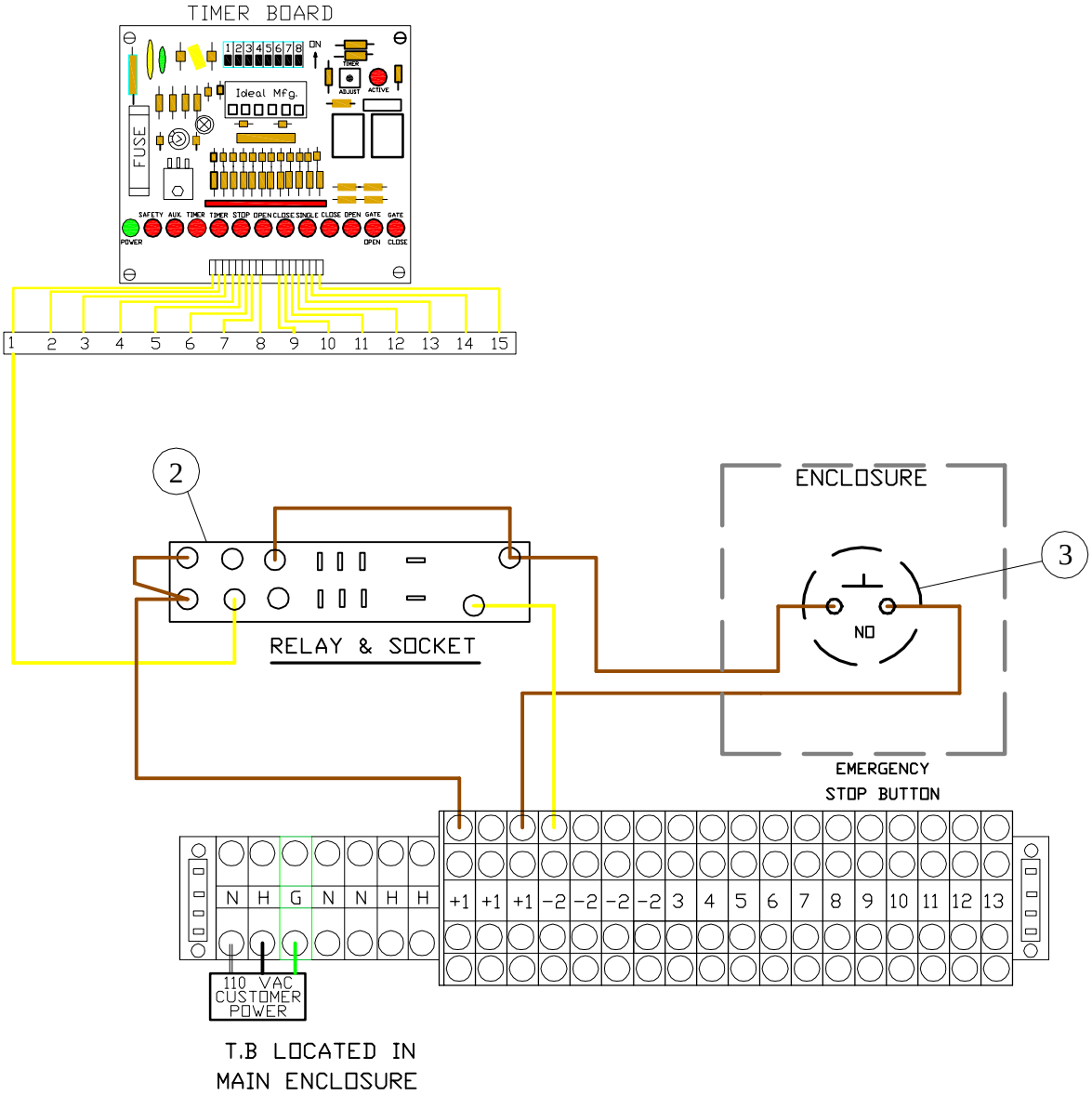

TILT-A-WAY HYDRAULIC ROAD GATE OPERATOR
HYJD-DC-25 & HYJD-DC-25E
EMERGENCY STOP COMPONENTS

REF. NO.	PART NO.	DESCRIPTION	REQ. NO.
1	PEO678	Relay (not shown)	1
2	PEO606A	Socket, Relay	1
3	PEO257	Emergency Stop Button	1

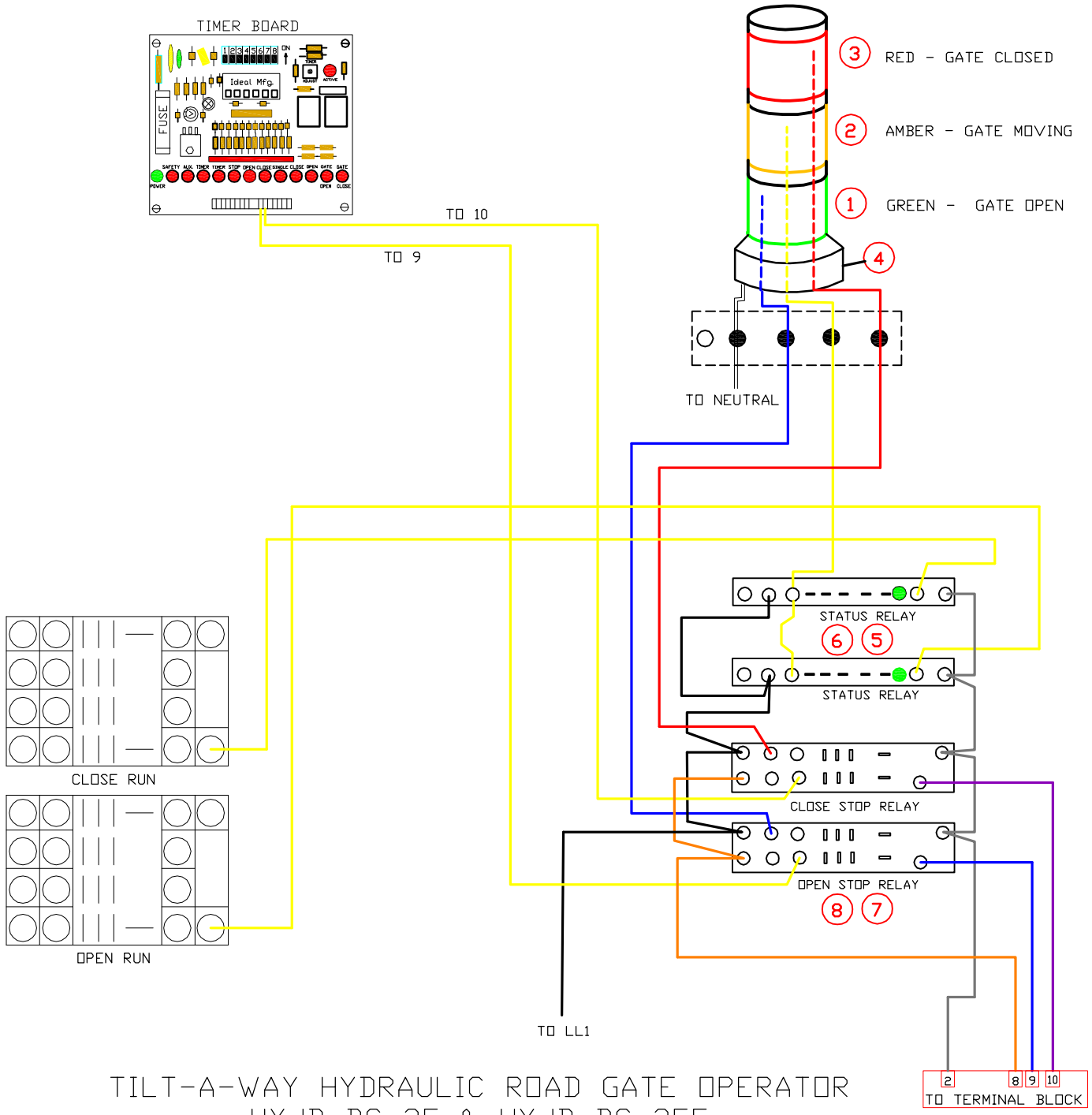

TILT-A-WAY HYDRAULIC ROAD GATE OPERATOR
HYJD-DC-25 & HYJD-DC-25E
SAFETY WARNING LIGHT

REF. NO.	PART NO.	DESCRIPTION	REQ. NO.
1	PEO361	Light Module - Green - Steady 120 VAC	1
2	PEO362	Light Module - Amber - Steady 120 VAC	1
3	PEO363	Light Module - Red - Steady 120 VAC	1
4	PEO360	Pole Mount Base	1
5	PEO639A	Relay Socket	2
6	PEO639	Relay	2
	PEO364	Single Tone Sound Module (optional) 120 VAC	
	PEO365	Incandescent Lamp (replacement) 120 VAC	
7	PEO606A	Relay Socket 8 Pin	2
8	PEO678	Relay 8 Pin	2

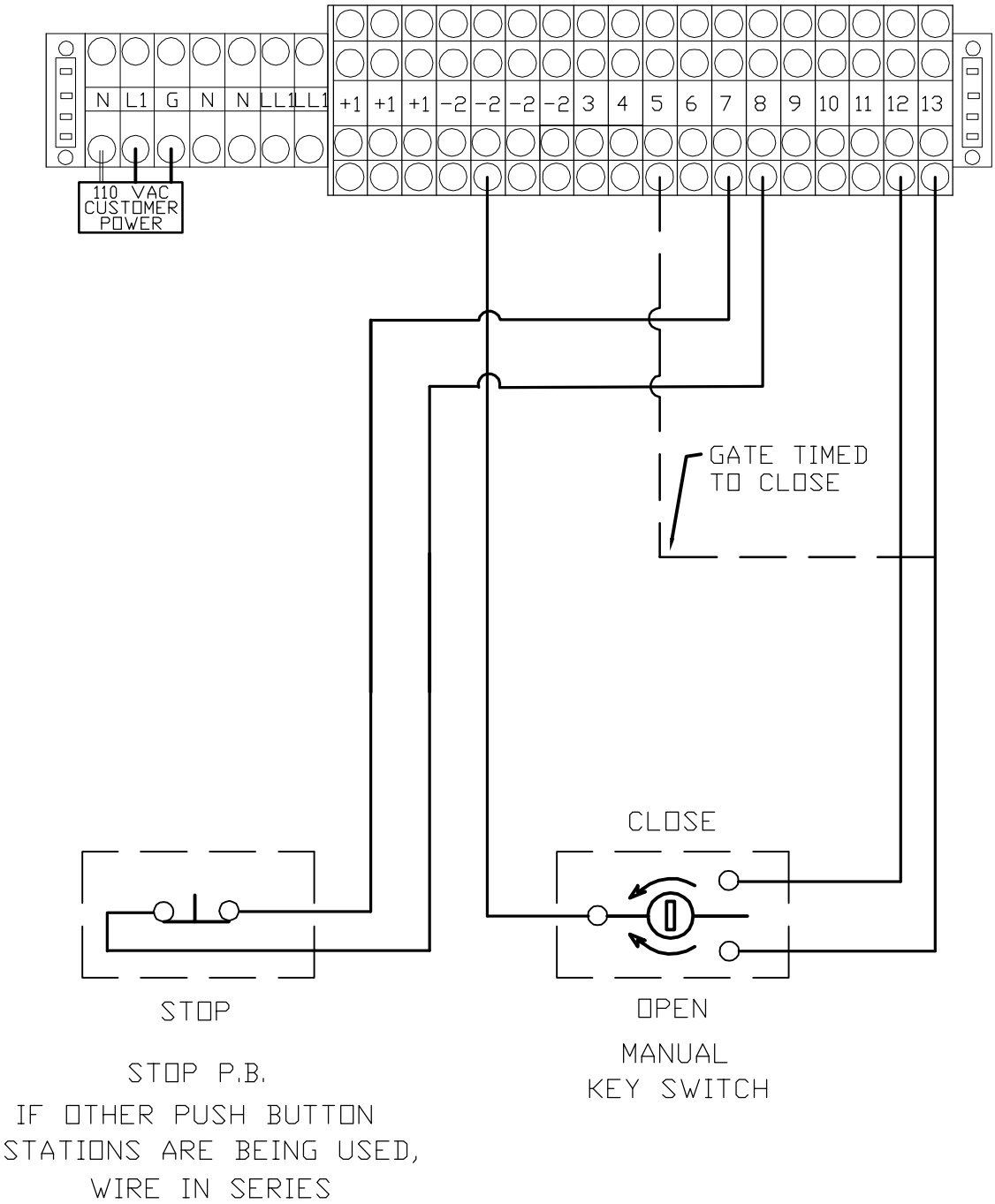

TILT-A-WAY ROAD GATE MANUAL KEY SWITCH
HYJD-DC-25 & HYJD-DC-25E

	PART NO	DESCRIPTION	REQ NO
	PE0263	Manual Key Switch	as req'd

ALUMINUM COVERS
STEEL DOORS

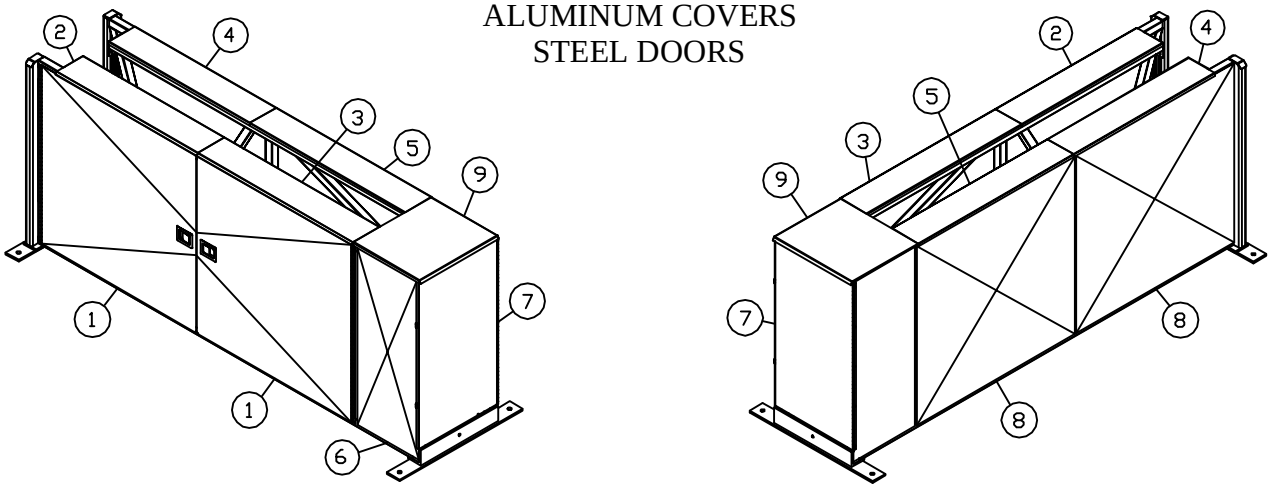

HYJD-DC-25
TILT-A-WAY HYDRAULIC OPERATOR ENCLOSURE

	PART NO	DESCRIPTION	REQ NO
1	FGO643	Maintenance Access Door	2
2	FGO421D	Front Top Door Cover	1
3	FGO420D	Center Top Door Cover	1
4	FGO421	Front Top Cover	1
5	FGO420	Center Top Cover	1
6	FGO425	Rear Side Cover	2
7	FGO403	Door	1
8	FGO424	Large Side Cover	2
9	FGO 423	Rear Top Cover	1

ALUMINUM COVERS
STEEL DOORS

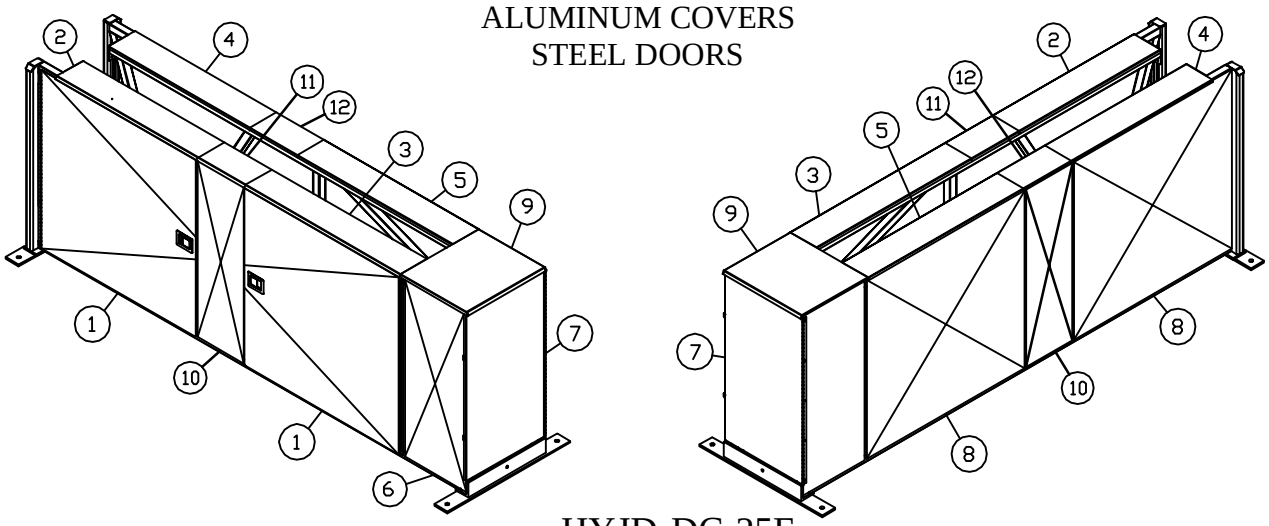

HYJD-DC-25E
TILT-A-WAY HYDRAULIC EXTENDED OPERATOR ENCLOSURE

	PART NO	DESCRIPTION	REQ NO
10	FGO 426	Extended Side Cover	2
11	FGO 422D	Extended Top Door Cover	1
12	FGO 422	Extended Top Cover	1

TIMER BOARD

NOTE:
WIRES NUMBER
14, 15
CONNECT TO RELAYS
SEE DWG# HYJD-DC-25
PAGE 7

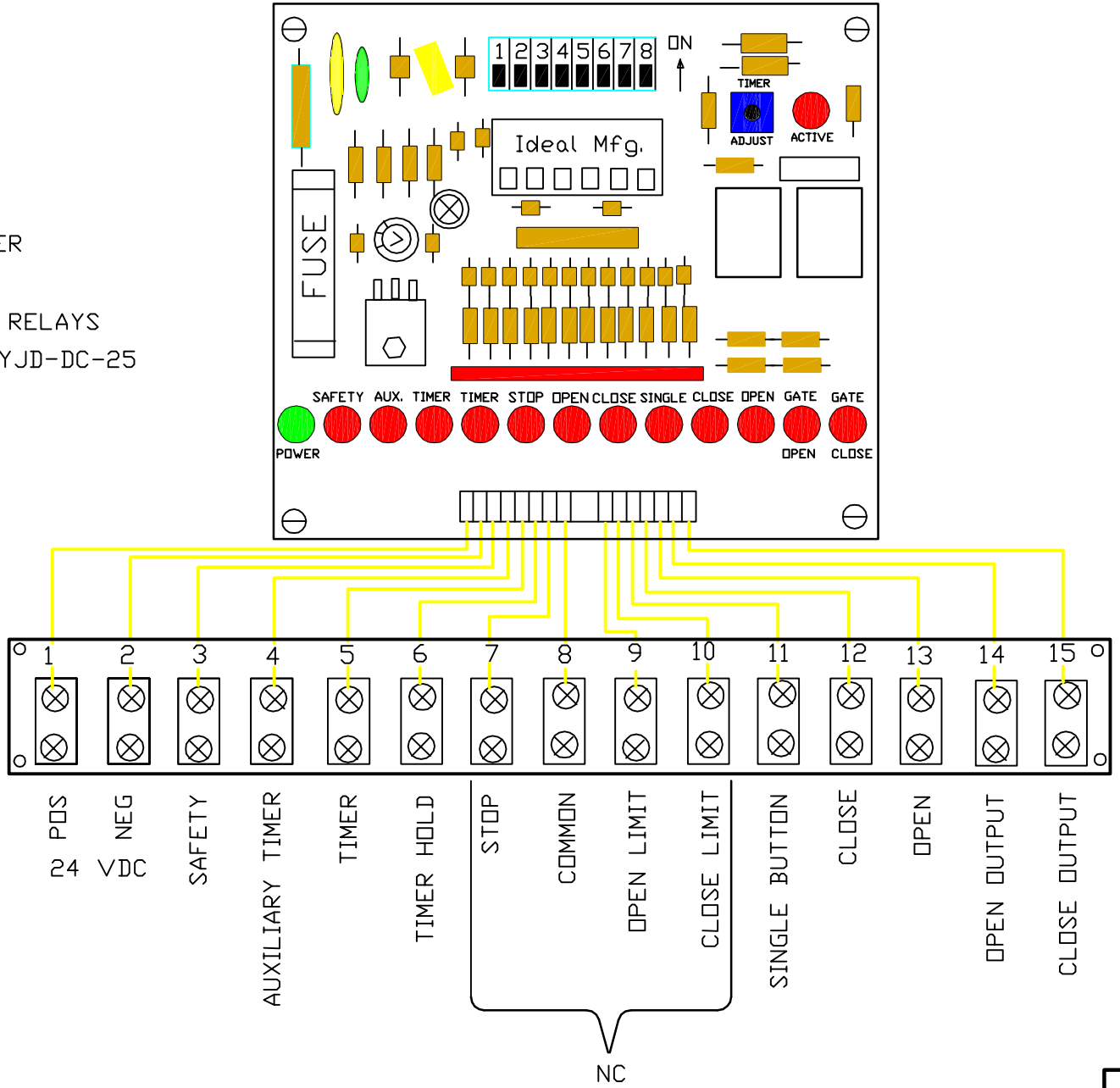

IDEAL MANUFACTURING INC.	
TILT-A-WAY ROAD GATE ELECTRICAL LOGIC TIMER BOARD	
HYJD-DC-25 RGHY-3031	PAC ACAD
DATE: 12-20-2007	

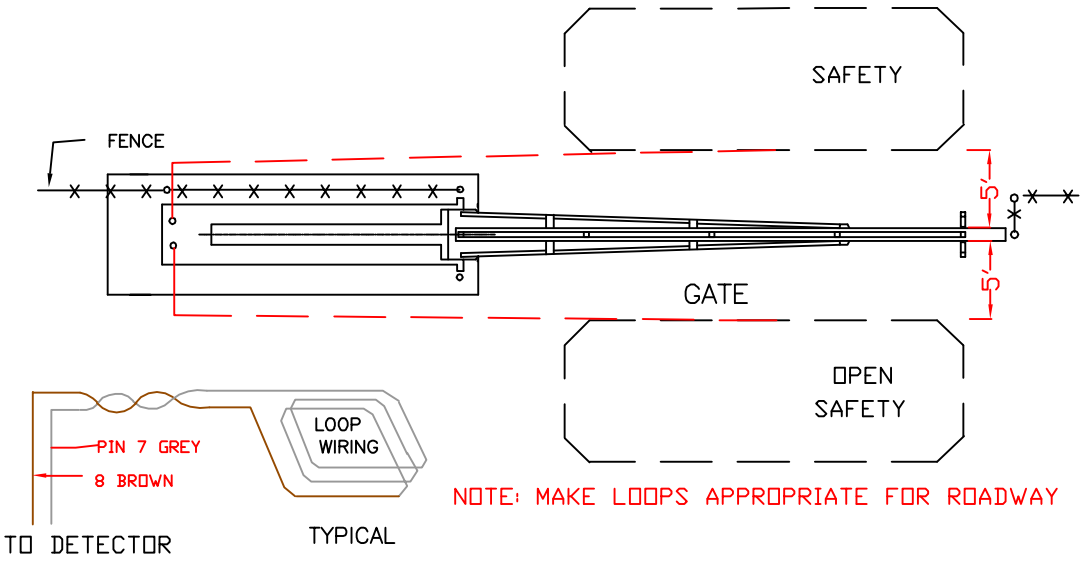

OPEN SAFETY

LOOP DETECTOR	PIN 1 BROWN	2 GREY	4 GREEN	5 GREY	6 BLUE
TERMINAL BLOCK	1	2	BOX GROUND	2	5

SAFETY

LOOP DETECTOR	PIN 1 BROWN	2 GREY	4 GREEN	5 GREY	6 ORANGE
TERMINAL BLOCK	1	2	BOX GROUND	2	3

NOTE:
Lead wires from more than one loop installation may be routed in same conduit if wires from each individual loop are twisted at least 6 turns per 12 inches.

NOTE: Loop to open gate, pin-6 Blue
Terminal - 13 OR 5 FOR TIME TO CLOSE
Loop to close gate, pin-6 Purple
Terminal - 12

TILT-A-WAY HYDRAULIC ROAD GATE OPERATOR
HYJD-DC-25 & HYJD-DC-25E

ELECTRICAL LOOP WIRING

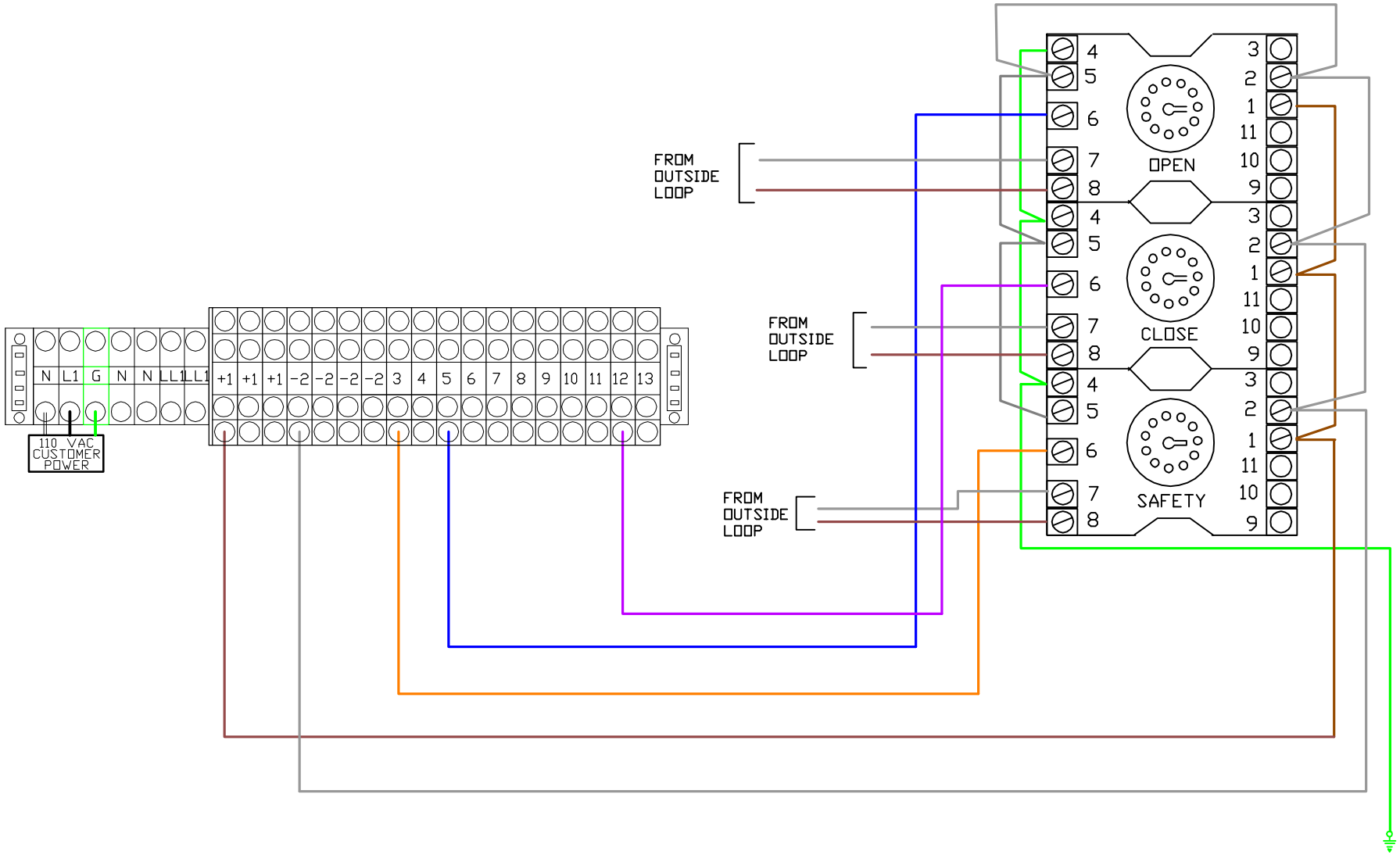

TILT-A-WAY ROAD GATE

LOOP DETECTOR DIAGRAM

Memo **EMX Industries Inc.**

TO: **Loop Detector Installers**

FROM: Joe Rozgonyi

DATE: July 15, 1996

SUBJECT: **Loop Wires Installation**

Dear Installer:

You may have installed loops for some time. Or, you may be just starting out. In any case, it is good to refresh our memory and maybe learn some new tricks.

First, remember that the loop is an integral part of the detector electronic circuitry. We, the loop detector manufacturers entrust you with making a very important electronic part of our loop detector.

Materials used in the construction of the loop are important. The loop wire should be 16 gage stranded tinned copper wire with cross-linked polyethylene (XLPE) insulation rated for 600V. By using this wire you get the following **advantages:**

a. The wire gage is large enough so the serial resistance of the loop is low.

b. The wire is flexible enough to work with in the saw cut, minimizing the possibility of a damage to the insulation.

c. The XLPE insulation has increased moisture and solvent resistance, and superb aging characteristics. Moisture and solvents in the black top pavement or oil spills from the cars are the major causes in long term insulation damage that causes **intermittent loop lockups and false detection.**

Note: The standard THHN wire so popular with installers is designed for the following applications:

" An all around general purpose building wire, for fixture raceways, conduit and tubing raceways, internal wiring of fixtures and applications requiring building wire".

Please note that the THHN wire was designed for conduit application. It sometimes has a very thin sheeting of nylon, which protects it from moisture, but it is easily damaged during wire installation in the saw cut.

Sealant: Use only a commercial type of loop sealant designed for traffic loops. Any other material will not work for a long time.

Backer Rod: Use a backer rod to ensure that the wires are in place and do not vibrate under the backer rod. Any vibration or wire movement will cause a false detection.

We have the materials covered so let's discuss the **wire installation.** The purpose of all the installation rules you may have heard or read is very simple. We want you to construct a wire coil in the pavement that will comply with the following:

a. The loop wire insulation will be intact for a long time after you have sealed it in the pavement.

b. The loop wire will not move or vibrate in the pavement.

c. The loop wire will be away from any electrical noise.

d. The loop wire will be away from any moving metal you do not want to detect.

e. The loop wire continuity (or serial resistance) will be low and constant.

Let's expand on these five points:

a. The wire insulation is very important in preventing a false detection and detector lock-ups. So any scratches on the wire insulation, sharp edges in the saw cut, or small stones in the saw cut and sharp tools used during the installation will cause damage to the wire.

Good Insulation = No Call Back

b. Any vibration of the loop wires or the movement of the steel mesh underneath of the loop will cause false detection. Before the loop installation, inspect the pavement. If in the area of the loop you see large cracks in the pavement and there is an evidence of pavement movement, there is a potential problem. Parts of the pavement may move after you have installed the loops and damage the wire, or cause false detection. Use the backer rod to make sure that the wire is held firm in the saw cut.

No Wire Vibration and Good Pavement = No Call Back

c. If you have a power line running under the loop wire do not be surprised if you get false detects. The changes in electrical current are detected by the loop detector as cars.

No Power Lines Close To The Loop = No Call Back

d. If you have a metal slide gate or a metal overhead door close to the loop, the detector will detect it. The detector cannot distinguish between the metal in the gate and the metal in the car.

No Moving Metal Close To The Loop = No Call Back

e. Wire nut as a splice connection is great when dealing with mains. However, when you have to make a splice on the lead-in wire use a solder iron. The current on the loop wire is too low to overcome the long term oxidation occurring on a wire nut connection.

Soldered Splices = No Call Back

In summary

The following elements can reduce the loop detector sensitivity:

1. Underground steel reinforcing - make the loop cut shallow in concrete pavement (approx. 1 inch) or use fiberglas mesh when installing new concrete pavement.

2 More than one loop connected to one detector - if you are experiencing a low sensitivity problem and you have two loops on one detector, consider adding an additional loop detector. Two loops on one detector = half of the sensitivity.

The following elements can cause detector lock up or intermittent detection:

1. Cross-talk between adjacent loops due to both having the same operating frequency. Use the LD-2000 loop detector frequency counter feature to measure the loop frequency.

2. Inadequate loop spacing - keep loops 4 feet apart.

3. Loop wire vibration in the saw cut - use backer rod.

4. Splices with wire nut - solder all splices

5. Lead-in wires not twisted - twist lead-in wire at least 6 turns per foot.

6. Power lines close to the loop - keep at least 6 feet away from power lines.

7. Loop too close to moving gate - keep at least 4 feet way.

Note: Always connect safety loops in series, free exit loops can be connected in parallel.

Use automatic sensitivity boost to detect high bed vehicles.

Use the filter function to filter out RF noise generated by police and EMS vehicles.

Use fail safe detector for safety and fail secure detector for free exit application.

Shortcut: You can avoid installation problems and guess work by simply installing a well constructed preformed loop like our EMX Lite Loop.

Loop Sizes and Loop Characteristics

Loop Size	Loop Size	Inductance	Turns	Detect. Height
2	2	60	5	1.6
2	4	60	4	1.6
2	6	80	4	1.6
2	8	60	3	1.6
2	10	72	3	1.6
2	12	84	3	1.6
2	14	96	3	1.6
2	16	108	3	1.6
2	18	120	3	1.6
2	20	132	3	1.6
4	4	80	4	3.2
4	6	100	4	3.2
4	8	72	3	3.2
4	10	84	3	3.2
4	12	96	3	3.2
4	14	108	3	3.2
4	16	120	3	3.2
4	18	132	3	3.2
4	20	144	3	3.2
4	22	156	3	3.2
4	24	168	3	3.2
4	26	180	3	3.2
4	28	192	3	3.2
4	30	102	2	3.2
4	32	108	2	3.2
4	33	111	2	3.2
4	34	114	2	3.2
4	36	120	2	3.2
4	38	126	2	3.2
4	40	132	2	3.2
6	6	120	4	4.8
6	8	84	3	4.8
6	10	96	3	4.8
6	12	108	3	4.8
6	14	120	3	4.8
6	16	132	3	4.8
6	18	144	3	4.8

All the numbers are approximated, actual results may vary.

Loop Sizes and Loop Characteristics

Loop Size	Loop Size	Inductance	Turns	Detection Hight
6	20	78	2	4.8
6	22	84	2	4.8
6	24	90	2	4.8
6	26	96	2	4.8
6	28	102	2	4.8
6	30	108	2	4.8
6	32	114	2	4.8
6	33	117	2	4.8
6	34	120	2	4.8
6	36	126	2	4.8
6	38	132	2	4.8
6	40	138	2	4.8
8	4	120	4	3.2
8	6	140	4	4.8
8	8	96	3	5.6
8	10	108	3	5.6
8	12	120	3	5.6
8	14	132	3	5.6
8	16	144	3	5.6
8	18	78	2	5.6
8	20	84	2	5.6
8	22	90	2	5.6
8	24	96	2	5.6
8	26	102	2	5.6
8	28	108	2	5 6
8	30	114	2	5.6
8	32	120	2	5.6
8	33	123	2	5.6
8	34	126	2	5.6
8	36	132	2	5.6
8	38	138	2	5.6
8	40	144	2	5.6

Loop Numbers
Serial Resistance: betwen two lead-in wires - less than 5 ohms
Leakage to Ground: between one lead-in wire and the ground more than 10 mega ohm at 500VDC for one minute.
Use DI 6200 insulation tester or equivalent

All the numbers are approximated, actual results may vary.

D-TEK Vehicle Loop Detector - Operating Instructions

We at EMX have designed the new D-TEK vehicle loop detector with the following objectives in mind:

1. Compact package to allow easy installation into small operator housings.
2. All the controls are accessible from the outside for easy installation and operation.
3. Integral loop conditioner is provided, to enable detector operation with marginal loops.
4. Provide all the features and controls necessary for a variety of applications.
5. Use metal housing for maximum durability and RF blocking.
6. Provide maximum surge protection on all inputs and outputs of the detector.

We took extra care to achieve and exceed these objectives. For example the controls are divided into two groups. The group on the front of the detector is for basic operation and the group on the back of the detector is for advanced settings. This way the more advanced settings are not visible to the casual user.

There is no skimping on the quality in the D-TEK detector. The housing is made from aircraft quality anodized aluminum. All the switches have gold plated contacts and are sealed for protection. The detector is protected by easily replaceable fuse, snubbing circuitry on the relay contacts, metal oxide varistor on the power input and triple protection on the loop input.

The D-TEK features are extensive and they include full loop diagnostics with frequency counter, 10 sensitivity settings, delay and extend features, "fail safe" and "fail secure" operation, automatic sensitivity boost, pulse or two presence relay operation and more.

Technical Information

Detector Connections

Pin	Function	Harness
1	Power	White
2	Power	Black
3	Relay 2 N.O	Orange
4	Ground	Green
5	Presence Relay Comm..	Yellow
6	Presence Relay N.O.	Blue
7	Loop	Gray
8	Loop	Brown
9	Relay 2 Comm..	Red
10	Presence Relay N.C.	White/Blk or Pink
11	Relay 2 N.C.	White/Red or Violet

Note: Functions on pins 6 and 10 are reversed if DIP 4 is set to **OFF** "Fail Secure" operation

Front Indicators

1. Green Led is ON - the detector is powered.
2. Red Led is ON - the detector detected a vehicle
3. Green Led is Blinking - the loop failed and is shorted or disconnected
4. Green Led is Blinking with two consecutive fast blinks - the loop failed in the past and now is working correctly.
5. Red Led is Blinking at the start of a vehicle detection - the Filter function is ON
6. Red Led is Blinking at the end of a vehicle detection - the Extend function is ON
7. Red Led is Blinking during a vehicle detection - 4 minute limited presence time has expired.

   Note: Functions on pins 6 and 10 are reversed if DIP 4 is set to OFF

Front Controls

Reset — this toggle switch when pushed momentarily down will reset the detector

Frequency Counter — this toggle switch when pushed momentarily up will count the frequency on the loop. This count is displayed by the Red Led blinks, each blink represents frequency of 10K Hz. Count between 3 to 13 blinks confirms that the loop detector is tuned to the loop.

Frequency — This toggle switch controls the loop frequency. Set different frequencies on adjacent loops. Verify frequencies with the frequency counter by counting the Red Led blinks.

Back Controls

Sensitivity — this rotary switch controls the detector sensitivity. During normal operation the sensitivity level is set to 3 or 4.

DIP Switch Functions

DIP	OFF	ON
1	Pulse on Relay II	Presence on Relay II
2	Pulse on detect	Pulse on Un-detect
3	Constant presence	4 minute limited presence time
4	"Fail Secure"	"Fail Safe"
5	Filter Off	Filter On
6	ASB Off	Automatic Sensitivity Boost On
7	Extend detect	6 seconds
8	Extend detect	3 seconds

When Dip 7 and 8 are in ON position the extend time is 9 seconds.

Warning: Do not use limited presence setting and / or "Fail Secure" setting for reversing gates, doors or barriers.

DIP - Detector Functions

1. Presence function is provided always by the presence relay output on pins 5, 6, and 10. These outputs are active when the detector detects a car. If there is a need for an additional presence output the Relay 2 can be configured as a second presence output by setting DIP 1 to ON position.

2. Pulse function is provided by the Relay 2 output on pins 3, 9, and 11. To obtain pulse on Relay 2 set DIP 1 to OFF position. The pulse of about 0.5 second can be generated when the car enters the loop or when it exits. To generate pulse on vehicle entry to the loop set DIP 2 to OFF position. To generate pulse on vehicle exit from the loop set DIP 2 to ON position.

3. The presence relay provides constant output as long as the car is detected on the loop. To obtain constant presence time set DIP 3 to OFF position. In some applications limited presence time is required. To obtain limited presence time of approximately 4 minutes set DIP 3 to ON position. Be aware that the detector relay will be released after 4 minutes even if the vehicle is still detected by the detector. This may by a serious hazard in applications where gates, doors or barriers are reversed, therefore never use this option in these applications.

4. When DIP 4 is set to ON position the detector works in "Fail Safe" mode of operation the detector will issue a detect signal when a car is detected, loop is disconnected or shorted, or when the power to the detector is interrupted. It is strongly recommended to use the detector in this mode.

   In some application there is a need to ignore the loop or power failures and only to provide the detect signal when a car is detected on the loop. To ignore loop or power failures set the detector to "Fail Secure" by setting DIP 4 to OFF position. Do not use this setting for application where gates, doors or barriers have to be reversed.
   Note: Functions on pins 6 and 10 are reversed if DIP 4 is set to OFF

5. In some applications it is necessary to filter out short detections such as cross traffic or short burst of radio frequency such as keying of a CB transmitter. To ignore these short detections set DIP 5 to ON position. This will cause any detection that is shorter than 2 seconds to be ignored.

6. To increase detection height when detecting high bed vehicles set DIP 6 to ON position. This setting will cause the sensitivity to automatically increase once the front axle of the truck is detected. The sensitivity will go back to the normal level once the truck left the loop.

NOTES

7. To extend the presence output for 6 seconds after the vehicle left the loop set DIP 7 to ON position.

8. To extend the presence output for 3 seconds after the vehicle left the loop set DIP 8 to ON position.

Note: If DIP 7 and DIP 8 are set to ON position the presence output will be extended 9 seconds after the vehicle left the loop.

Troubleshooting

Symptom	Possible Cause	Correction
Green indicator is not ON	No input voltage	1. Check voltage on pins 1 and 2. 2. Replace internal fuse 3. Check wiring to detector
Green indicator flashes	Loop wire shorted or disconnected	1. Check loop resistance on pins 7 and 8 it should be less than 5 ohms and more than 0.5 ohms.
Green indicator flashes with two consecutive fast blinks	Loop wire **was** temporarily shorted or disconnected	1. Check loop resistance on pins 7 and 8 while driving over the loop it should be less than 5 ohms and more than 0.5 ohms. The reading should be steady.
Detector stays in detect mode after the car left the loop and fails to undetect.	1. Faulty loop 2. Poorly crimped terminals 3. Loose connections	1. Perform megger test between loop lead and ground the reading should be larger than 100 megaohms. 2. Check that loop is tightly connected to proper terminals 3. Check that splices are tightly soldered and sealed against moisture.
Detector detects intermittently even when there is no car on the loop.	1. Faulty loop 2. Poorly crimped terminals 3. Loose connections 4. Cross-talk between adjacent loop detectors	1. Perform megger test between loop lead and ground the reading should be larger than 100 megaohms. 2. Check that loop is tightly connected to proper terminals 3. Check that splices are tightly soldered and sealed against moisture. 4. Set adjacent loops on different frequencies.

Technical Specifications

Power: the detector is available in the following voltages, 12V AC/DC, 24V AC, 24V DC, 110V AC, 220V AC. maximum current draw 100mA.

Low power detector is available with maximum current draw of 60mA

Temperature: -40F to + 180F
Environmental Protection: Ciruit board is conformally coated
Enclosure: Extruded anodized aluminum,

Height = 3.25 inches 83 mm
Width = 2.56 inches 40 mm
Depth = 3.65 inches 90 mm

Output Relays:	5A/125 V AC standard version, 1A/125 V AC low current version
Connector:	86CP11 compatible with 11pin Octal DIN rail mountable socket or wire harness
Surge Protection:	The detector is protectedwith neon discharge lamps, zenner diods and surge arrestors.
Loop Input:	Transformer isotated
Grounded Loop:	The loop isolation transformer allows operation with poor quality loops.
Loop Inductance Range:	20 to 2000 microhenries with Q factor of 5 or higher.
Tuning:	Detector automatically tunes to the loop after power application or reset.
Tracking:	Detector automatically tracks and compensates for environmental changes
Power Indicator:	Green LED solid light indicates power
Loop Failure Indicator:	Green LED blinks indicates loop problem
Loop Failure Memory:	Green LED blinks with fast consecutive blinks indicates past loop problem that healed.
Detect Indicator:	Red LED solid light indicates detection
Extend Indicator:	Red LED blinks after a car left the loop indicates time extend feature
Sensitivity:	is set by 10 position rotary switch
Frequency:	is set three position toggle switch
Infinite Presence Mode:	DIP switch selectable presence
Limited 4 Minutes Presence Time:	DIP switch selectable
Second Presence Relay:	DIP switch selectable
Pulse On Exit / Entry:	DIP switch selectable
Fail Safe / Secure :	DIP switch selectable
Filter:	DIP switch selectable 2 seconds
Exteded Detection:	DIP switch selectable 3, 6 and 9 seconds

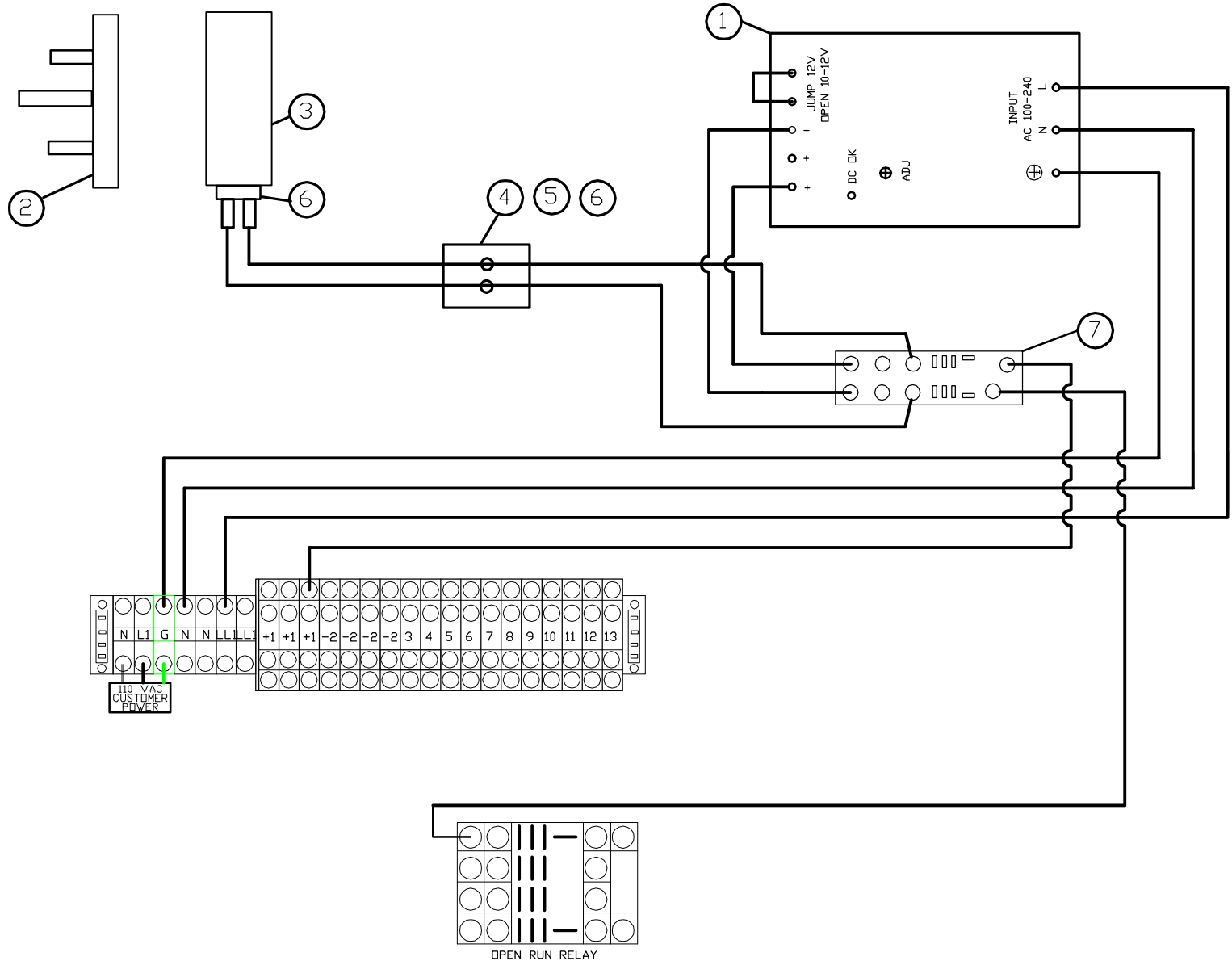

TILT-A-WAY HYDRAULIC ROAD GATE ELECTROMAGNETIC LOCK
HYJD-DC-25 & HYJD-DC-25E

REF NO	PART NO	DESCRIPTION	REQ NO
1	PE0276	110 VAC TO 12 VDC CONVERTER (Located in or near machine)	1
2	PE0277	ELECTOMAGNETIC ARMATURE (located stationary at outer end of barrier or at outer end of an opposite barrier)	1
3	PE0277	ELECTROMAGNETIC LOCK (located at outer end of barrier)	1
4	PE0245	JUNCTION BOX (located inside front of pedestal frame)	1
5	PE0237	JUNSTION BOX COVER	1
6	PE0246	1/2" STRAIN RELIRF FITTING (one at barrier lower pipe)	4
7	PE0606A	RELAY SOCKET	1
	PE0606	RELAY (not shown)	1

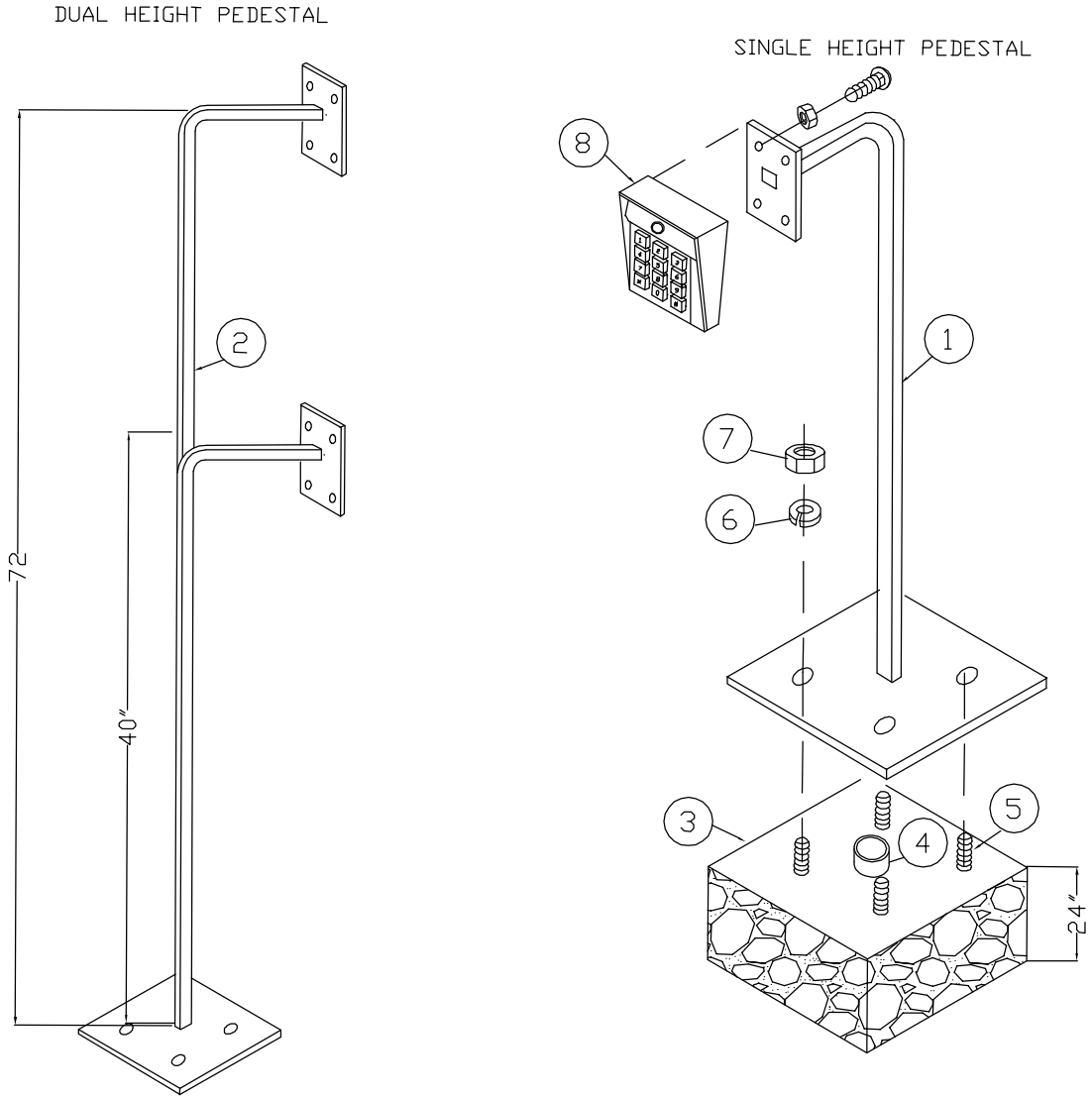

TILT-A-WAY HYDRAULIC ROAD GATE REMOTE CONTROL STATION
PEDESTAL AND GATELOCK
HYJD-DC-25 & HYJD-DC-25E

REF NO	PART NO	DESCRIPTION	REQ NO
1	N/A	SINGLE HEIGHT PEDESTAL	1
2	N/A	DUAL HEIGHT PEDESTAL 72" IN HEIGHT	1
3	N/A	CONCRETE SUPPORT PIER 15" X 15" X 24" DEEP	1
4	N/A	1" DIA. ELECTRICAL CONDUIT WITH 2 1/2" PROJECTION ABOVE CONCRETE ROUTED FROM BARRIER PEDESTAL	1
5	N/A	1/2" X 8" EXPANSION BOLT	4
6	N/A	1/2" LOCK WASHER	4
7	N/A	1/2" HEX NUT	4
8	N/A	REMOTE CONTROL STATION OF CHOICE (Included are bolts, nuts, keys, and plate)	4

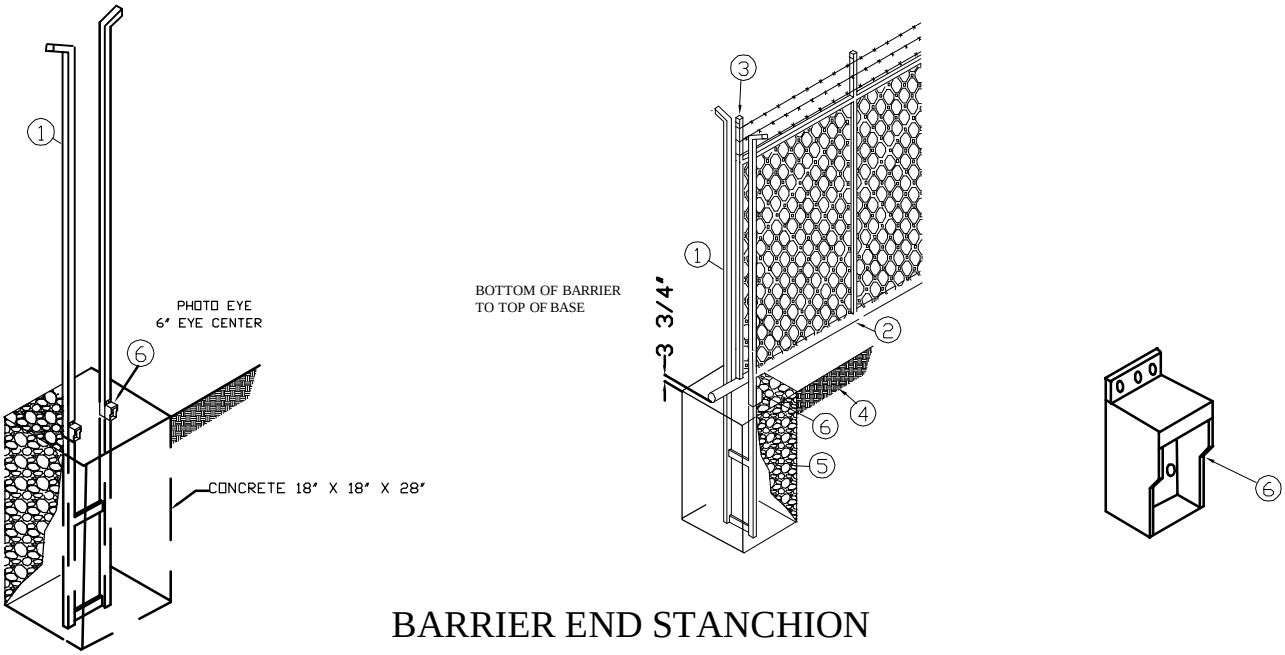

BARRIER END STANCHION

REF NO.	PART NO.	DESCRIPTION	REQ NO
1	FGO172	Stanchion Unit	1
2	N/A	Barrier Main Tube 3 3/4" Clearance to grade-line	
3	N/A	Top of Barrier Post flush with top of stanchion.	
4	N/A	Grade Line	
5	N/A	Concrete Embedment Block top at grade line or below size to suit conditions	
6	PEO404	Photo Eye	2

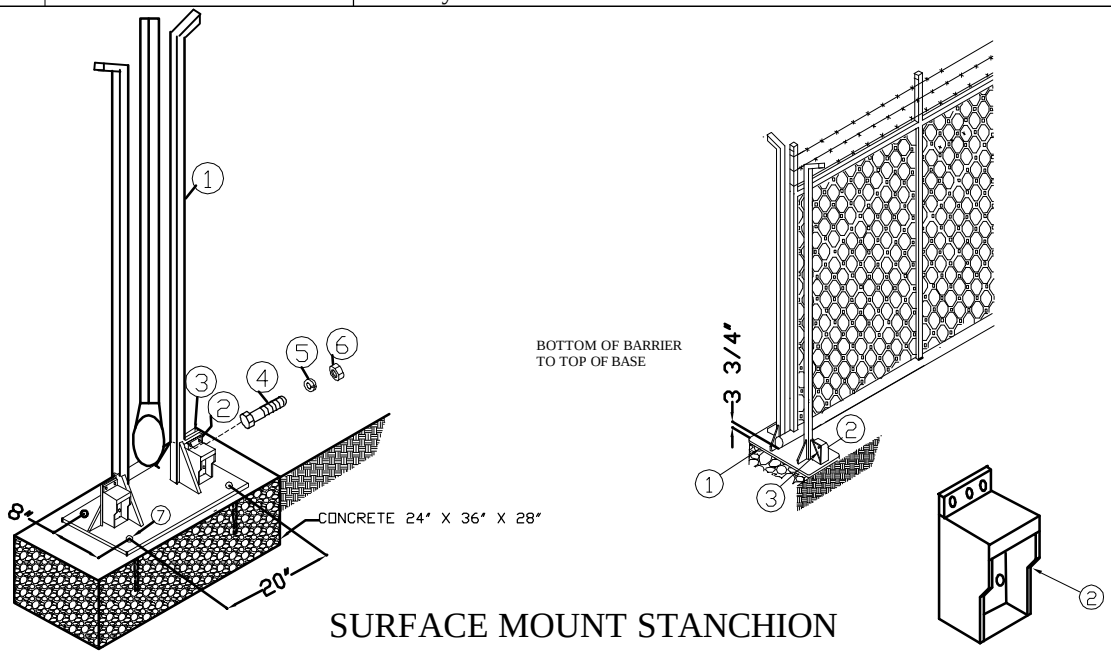

SURFACE MOUNT STANCHION

REF NO.	PART NO.	DESCRIPTION	REQ NO
1	FGO407	Surface Mount Stanchion Unit	1
2	PEO404	Photo Eye (2 on operator)	2
3	FGO406	Photo Eye Mount	2
4	N/A	5/16" x 1" Bolt	4
5	N/A	5/16" Lock Washer	4
6	N/A	5/16" Hex Nut	4
7	NA	3/4" x 6" Exposed Bolts	4

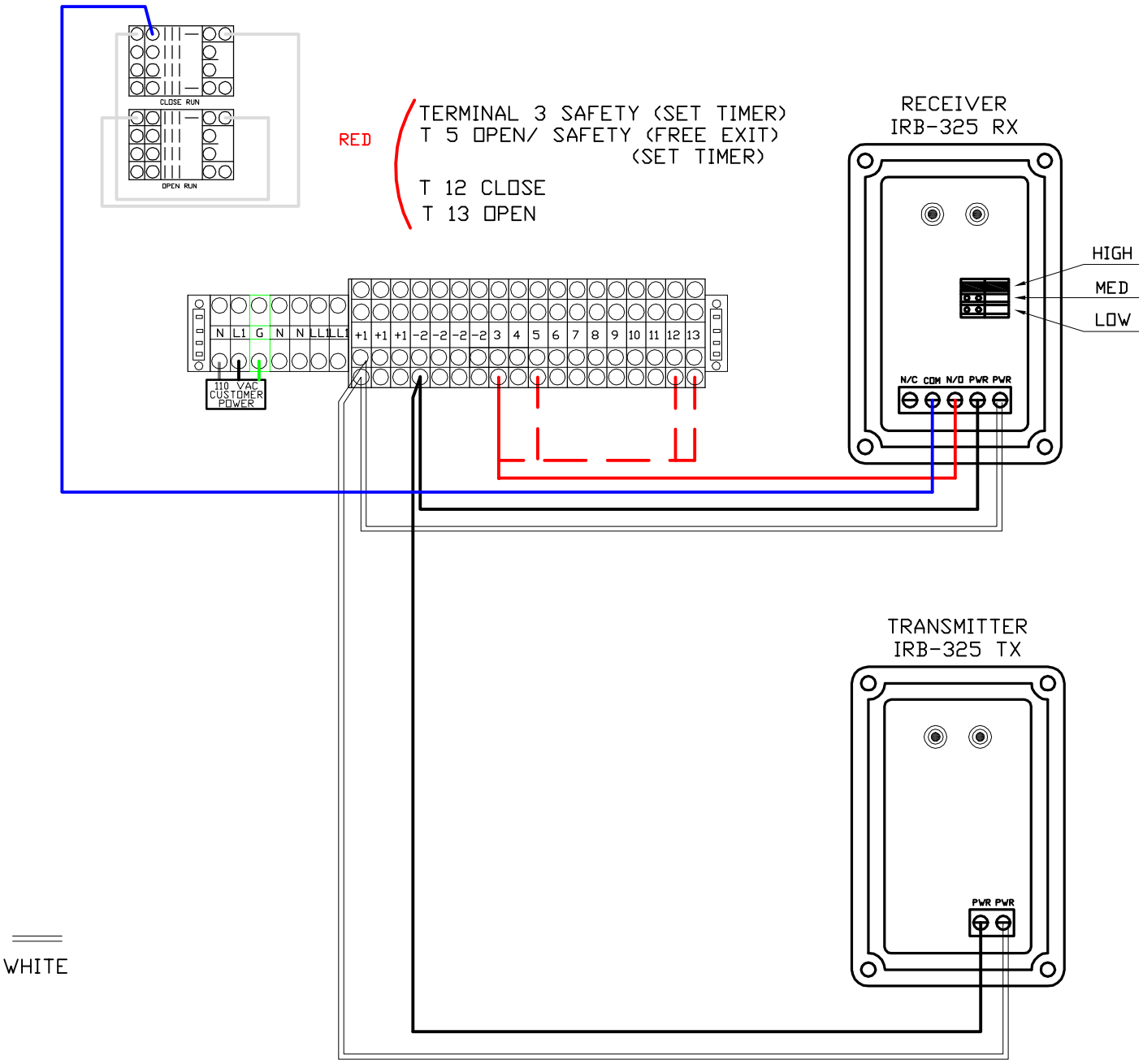

TILT-A-WAY HYDRAULIC OPERATOR
REFLECTIVE TYPE PHOTO EYE

REF NO.	PART NO.	DESCRIPTION	REQ NO
1	PEO404 (set)	Photo Eye 24VDC	1
2	PEO405	Hood (not shown)	2

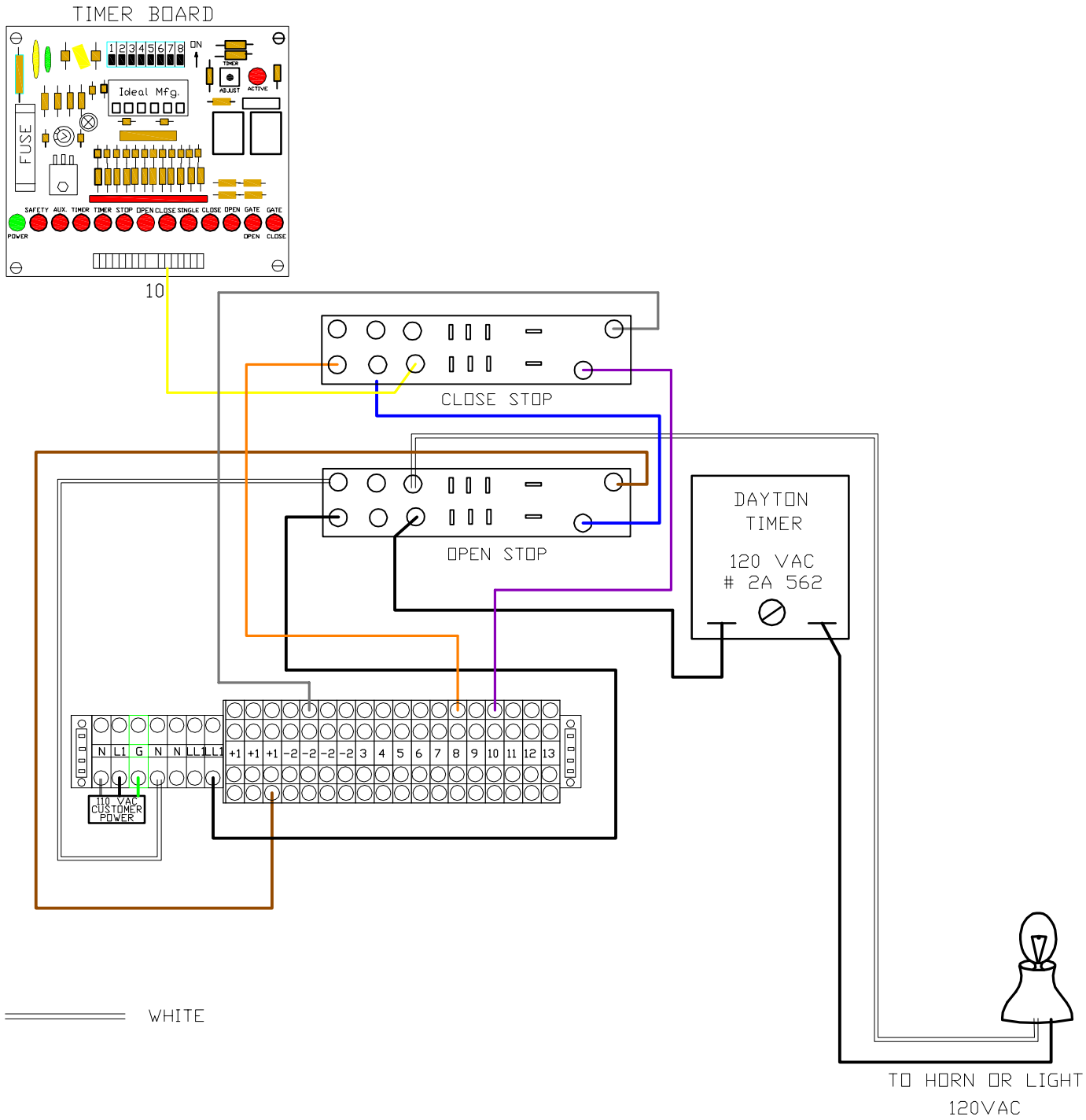

TILT-A-WAY HYDRAULIC OPERATOR

HYJD-DC-25 & HYJD-DC-25E

ROAD GATE HORN & LIGHT GATE OPEN INDICATOR

REF NO.	PART NO.	DESCRIPTION	REQ NO
1	PEO284	Delay Timer	1
2	PEO606A	Socket, Relay	2
3	PEO678	Relay	2
		Vehicle Indiacator Light (supplied by customer)	

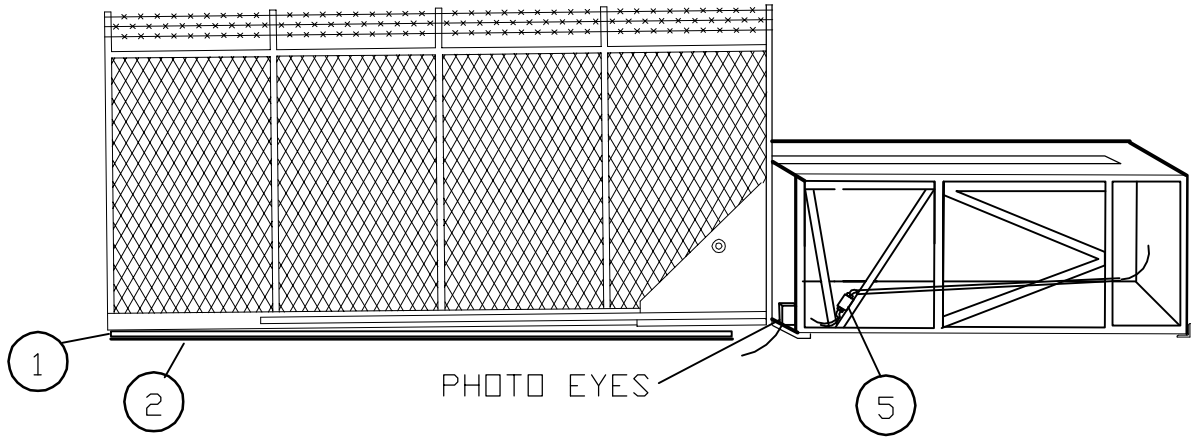

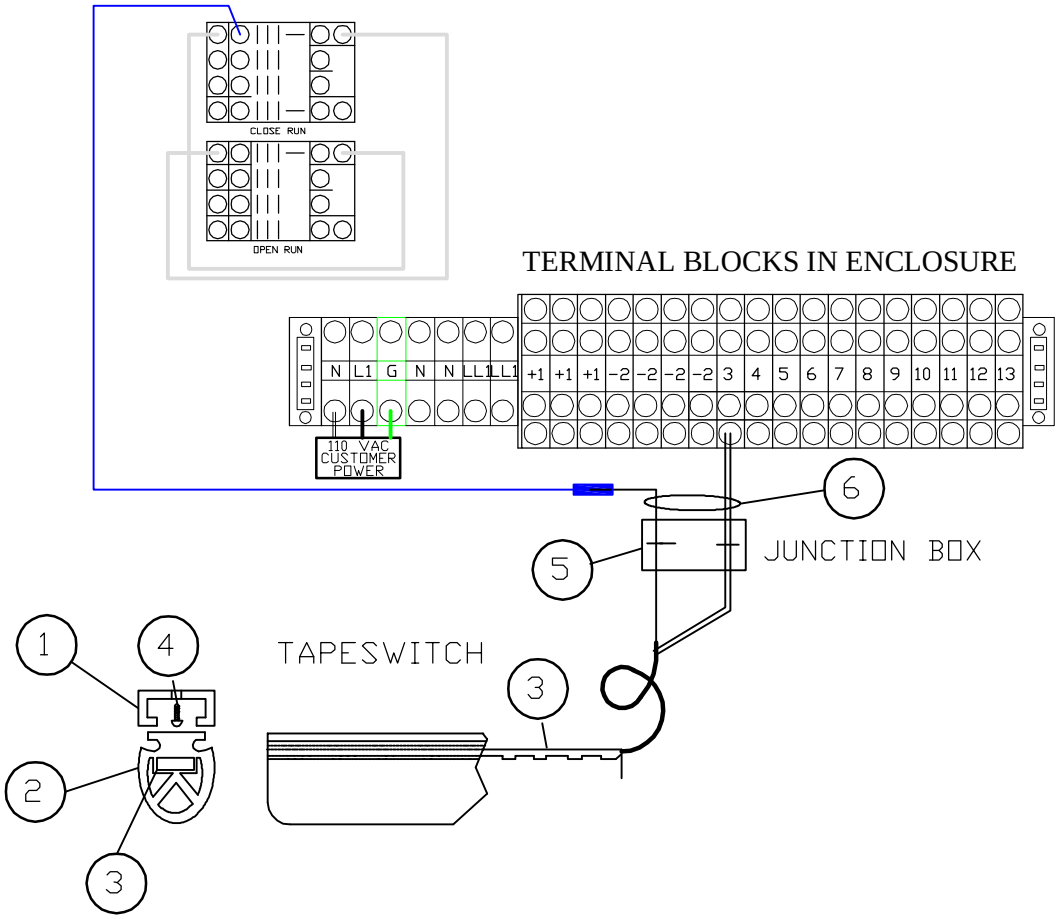

TILT-A-WAY HYDRAULIC OPERATOR
REVERSING EDGE INSTALLATION

REF NO.	PART NO.	DESCRIPTION	REQ NO
1	PEO243	Recersing Edge Holding Track (Length ia required)	1
2	PEO243A	Recersing Edge Rubber Strip (Length ia required) (Insert in track from front)	1
3	PEO244-Length	C Switch (Order Length as Required) (Insert in track from front)	1
4	N/A	8 x 3/4" Tapping Phillips Pan Head Screw	as req.
5	PEO410	Junstion Box	1
6	N/A	16 / 2 S O Cord	9'
	PEO246	1/2" Strain Relife Fitting (not shown)	4
	PEO237	Junction Box Cover (not shown)	1

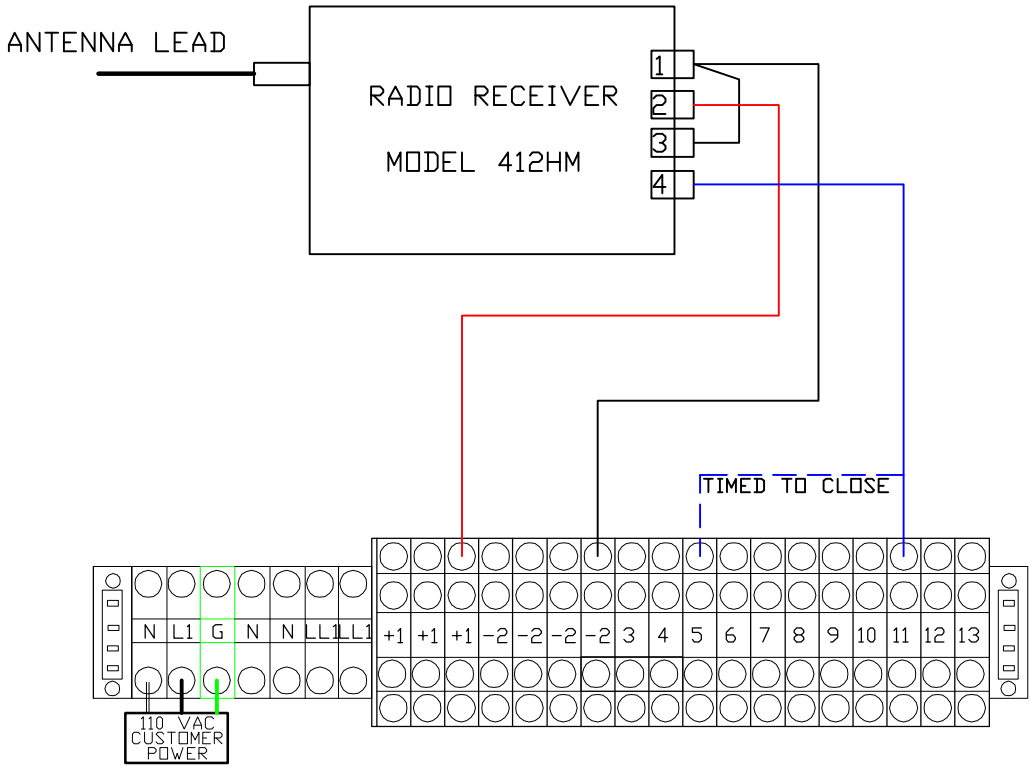

TILT-A-WAY HYDRAULIC ROAD GATE OPERATOR

HYJD-DC-25 & HYJD-DC-25E

RADIO RECEIVER

REF. NO.	PART NO.	DESCRIPTION	REQ. NO.
1	PEO353	Radio Receiver Model 412HM	1
2	PEO354	Radio Transmitter	as req

Lift-Master™
The Professional Line

Universal Receiver
Model 412HM
OWNERS MANUAL

SPECIFICATIONS

Output Rating.....5 Amps 28VAC or DC Max.
Power .....12VDC or 18 to 35VAC/DC, @ 30ma
RF Frequency.....390MHz

If the power is other than shown in specifications, Accessory Transformer Model 85 is required. Model 86 Coaxial Cable Kit is also available.

Accessory Transmitters – Series 50, 60, 70, 80 and 90.

WARNING

Disconnect power to opener before installing receiver or removing/replacing receiver cover.

The 412HM universal Receiver can be used with up to 15 rolling code transmitters or passwords in *high* security mode. Alternately, it can be used with up to 31 of any type transmitter in *normal* security mode, including any combination of rolling code, billion code, or code switch remotes.

The receiver and antenna use TV **Type F** coaxial connectors. The antenna can be plugged directly onto the receiver or mounted to a bracket and connected to the receiver with Model 86 Coaxial Cable Kit, depending on your requirements.

Select a location for the receiver which allows access to the terminals and space for the antenna (as far from metal structures as possible and preferably with the antenna in an upright position). Fasten the receiver securely with screws through the two holes provided in the cover flanges.

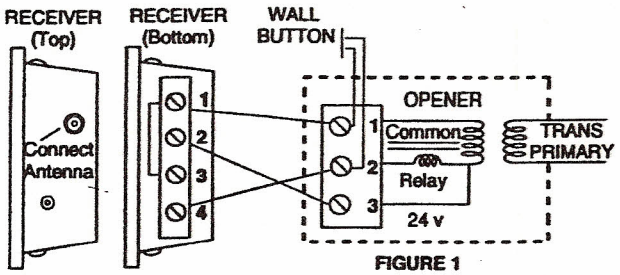

FIGURE 1

To comply with FCC/IC rules, adjustment or modification of receiver and/or transmitter is prohibited, except for changing the code setting and replacing the transmitter battery. THERE ARE NO USER SERVICEABLE PARTS.

WARNING

Children operating or playing with a garage door opener can injure themselves and others. *The garage door could close and cause serious injury or death.* Do not allow children to operate the door control push button or the remote control transmitters.

Install the receiver (and all door control push buttons) out of the reach of children and away from all moving parts of the door and door hardware, but *where the garage door is visible.*

FIGURE 1 – WITHOUT TRANSFORMER: Connect bell wire (not supplied) to receiver terminals 1 and 2, and to opener radio power terminals. All receiver terminals are unpolarized.

Also connect bell wire to receiver terminal 4 and opener terminal 2. Make a jumper wire connection to receiver terminals 1 and 3 as shown.

FIGURE 2 – WITH TRANSFORMER MODEL 85: Receiver terminals 1 and 2 are not used. Connect bell wire to receiver terminals 3 and 4 and to opener terminals used for push button controls. The transformer plugs into a 120V outlet.

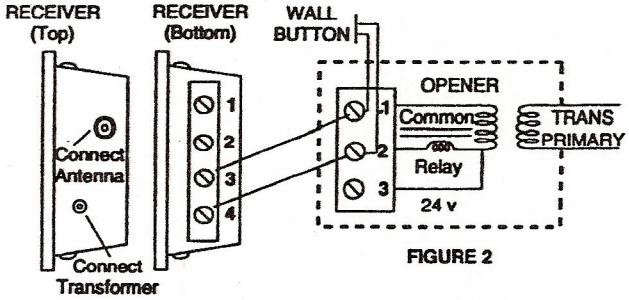

FIGURE 2

SET RECEIVER TO MATCH REMOTE CONTROL(S) CODE

Use a screwdriver to pry open the receiver cover as shown. **Re-connect power to opener.**

1. Press and HOLD the new remote control push button.
2. Then press the "Smart" button on the receiver. The adjacent indicator light will *flash.* Release the remote push button. The opener will now operate when the remote control push button is pressed. Return front panel to receiver.

NOTE: If the remote control push button is not held down until the receiver indicator light flashes, the receiver will not learn the code.

To Erase all Remote Control Codes:

- Press and hold the "Smart" button on the receiver panel until the indicator light turns off (about 6 seconds). ***All* the codes the receiver has learned will be erased.**

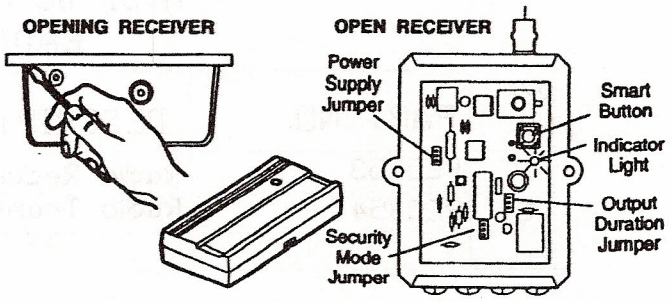

- Repeat Steps 1 and 2 to reprogram the receiver for each remote control transmitter in use.

Side 2 contains instructions for changing output duration, voltage settings, and security mode.

Lift-Master
SECURITY+

Model 971LM Security+ Single Function Remote Control

OWNER'S MANUAL

NOTICE: To comply with FCC rules, adjustment or modifications of this receiver and/or transmitter are prohibited, except for changing the code setting or replacing the battery. THERE ARE NO OTHER USER SERVICEABLE PARTS.

The 900 Series remote control works only with door openers and light controls having an orange "Smart" button and a yellow indicator light. The code between the remote control and the receiver changes with each use, randomly accessing over 100 billion new codes.

Programming instructions are described and illustrated below.

Security+ Garage Door Openers

To program the opener to accept the remote control code:

1. Press and *hold* the remote control push button. See Figure 1.
2. Press and release the "Smart" (learn) button on the opener panel. See Figure 2. The indicator light on the panel will begin to blink and the opener lights will flash once.
3. Release the remote push button.

Now the opener will operate when that remote control button is pressed. Test it by pressing the remote button to see that the door goes up and down.

Adding a remote can also be done from the door control, as follows:

1. *With the door closed,* press and hold the remote push button.
2. Press and hold the Light button on the door control.
3. Press and hold the door control push bar.
4. After the opener lights flash, release all buttons.

Test by pressing the remote push button.

To erase all remote control codes:

Press and hold the "Smart" button on the opener panel until the indicator light turns off (about 6 seconds). All transmitter codes are now erased. Then follow the steps above to reprogram each remote control.

WARNING

Children operating or playing with a garage door opener can injure themselves or others. The garage door could close and cause serious injury or death. Do not allow children to operate the wall push buttons or remote controls.

A moving garage door could injure or kill someone under it. Activate the opener only when you can see the door clearly, it is free of obstructions, and is properly adjusted.

Model 971LM Security+ Remote Control

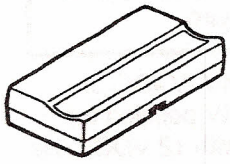

Figure 1

SECURITY+ Garage Door Opener

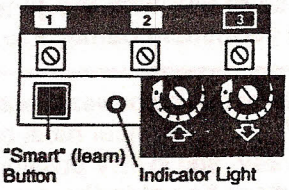

Figure 2

WARNING

Keep batteries away from small children. If swallowed, promptly notify doctor.

The Remote Control Battery

The lithium battery should produce power for up to 5 years. To replace battery, pry open case with visor clip or screwdriver, as shown. Insert battery *positive side up.*

Dispose of old battery properly.

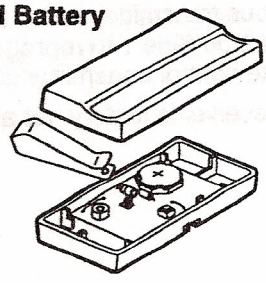

Replacement Parts

Model 971LM Security+ remote case (circuit board not included)	41A5056-1
3V2032 Lithium battery	10A20
Visor clip	29B137

FOR SERVICE DIAL OUR TOLL FREE NUMBER: 1-800-528-2817

TO SET OUTPUT DURATION

WARNING

The use of radios incorporating constant closure contacts on residential operators with fail-safe infra-red protectors is prohibited.

The receiver can be set for either constant or momentary closure on the output contacts. With the jumper in the "MOM" (Momentary) position, the contacts will close for 1/4 second regardless of the length of radio transmission. With the jumper in "CONST" (Constant) position, the contacts will stay closed as long as the radio continues transmitting.

The receiver is factory set at M.

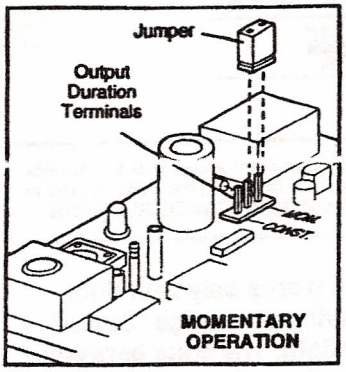

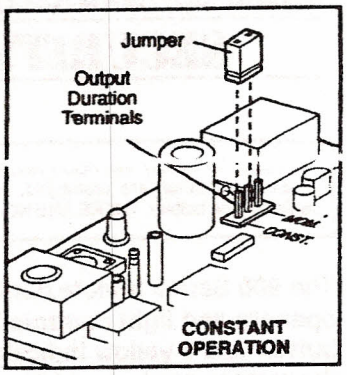

TO SET POWER SUPPLY VOLTAGE

CAUTION

The use of 24V with the jumper in 12V position will cause permanent damage to the receiver.

The receiver can be powered with either 24V AC/DC or with 12V DC. The jumper must be in the 24V position for use with 24V, and in 12V position for use with 12 VDC. ***The jumper must be set to the proper voltage to avoid damage to the receiver.***

The receiver is factory set at 24V.

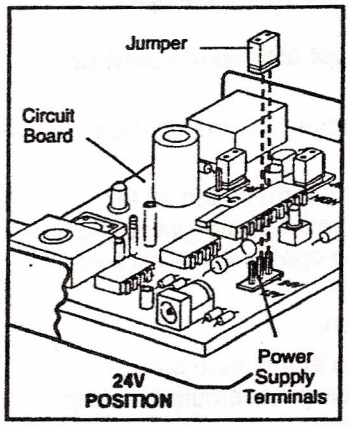

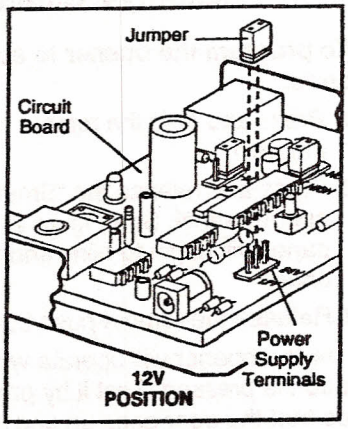

TO SET SECURITY MODE

The jumper must be set at the HIGH position for the receiver to operate in high security mode. It must be set at NORMAL position to operate at the normal mode.

When changing from normal to high security mode, any previous transmitter codes must be erased. Repeat Steps 1 and 2 on Side 1 to reprogram the receiver for each remote control transmitter in use.

The receiver is factory set at HIGH.

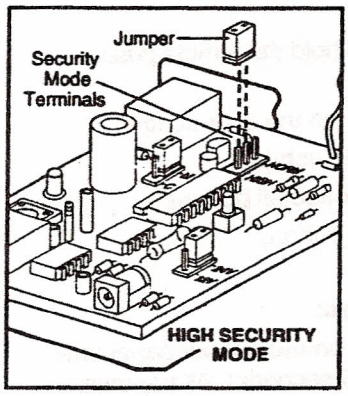

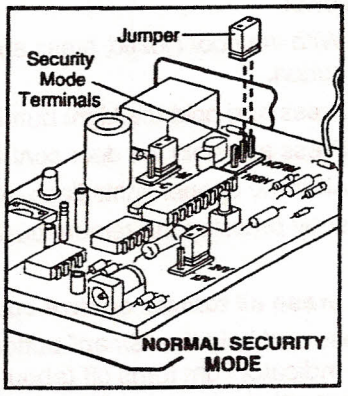

BATTERY CHARGER
OWNER'S MANUAL

INTERACTER II MODELS
PROFESSIONAL, LINEAGE, EX and INDUSTRIAL/ COMMERCIAL SERIES
6, 8, 12, 16, 24,36 and 48 Volt
---- CAUTION ----

READ THIS MANUAL CAREFULLY FOR
RULES OF SAFE OPERATION AND
PROPER USE OF THE CHARGER

***** SAVE THESE INSTRUCTIONS *****
IMPORTANT SAFETY INSTRUCTIONS

Interacter **offers a range of high performance Battery Chargers fo ruse in demanding applications, featuring a patented *microprocessor* system that out-performs all industry standard chargers in the same price range.**

The *THREE STAGE* Constant Current, Constant Voltage, Proportionally timed system used in all Interacter models provides fast charging and optimal timing over a wide range of battery sizes and depths of discharge.

STANDARD FEATURES OF ALL INTERACTER CHARGERS:

- ♦HIGH ENERGY RETURN, FAST CHARGING
- ♦CONSTANT CURRENT FIRST STAGE
- ♦DUAL VOLTAGE LIMIT (CYCLIC/ STANDBY)
- ♦PROPORTIONAL TIMED CYCLIC CHARGE STAGE
- ♦CONSTANT VOLTAGE FLOAT STANDBY
- ♦AUTOMATIC SAFETY OVERRIDE TIMER
- ♦START DELAY ON BATTERY CONNECT
- ♦SHORT AND REVERSE CONNECTION SHUTDOWN
- ♦RUGGED SCR PHASE CONTROL
- ♦MAINS ZERO-CROSSING BATTERY SENSING

LINEAGE SERIES (LS) MODELS are the most cost effective series and are available for 6, 12, 24, 36, and 48 volt batteries rated at up to 6 amps.

EX SERIES (EX) Utilizes the LS controls in a more compact and wall mountable package.

PROFESSIONAL SERIES (PS) MODELS are available for 12 and 24 volt batteries, rated at up to 10 Amps. In addition to the above features, they include Temperature Compensation, an LED Ladder Amp Meter, an 80% charging indicator and an internal preset “Battery Type” switch allowing the unit to be easily configured for use with Gel Cell, Sealed Lead Acid or Liquid Electrolyte batteries.

INDUSTRIAL/ COMMERCIAL SERIES (ICS) MODELS are heavy duty chargers available for 12,24,36, or 48 volt batteries ratedat up to 25 Amps. The ICS models provide all the same features as the PS models together with higher current ratings.

INDUSTRIAL/ COMMERCIAL SERIES 12,24,36,& 48 VOLT SPECIFICATIONS

MODEL ICS 12/25A
INPUT: 117 Volts AC 60Hz, 480 VA
OUTPUT: 12 Volts DC, 25 Amps

MODEL ICS 24/25A
INPUT: 117 Volts AC 60Hz, 900 VA
OUTPUT: 24 Volts DC, 25 Amps

MODEL ICS 36/20A
INPUT: 117 Volts AC 60Hz, 1120 VA
OUTPUT: 36 Volts DC, 20 Amps

MODEL ICS 48/20A
INPUT: 117 Volts AC 60Hz, 1500 VA
OUTPUT: 48 Volts DC, 20 Amps

Optional Export AC Input Ratings
100v-50Hz AC Input (Japan)
115/ 230v -50Hz AC Input (Europe) (CE)
Full Wave Phase Controlled Rectification
CONTROL:
Voltage limit:
Normal Mode 2.42 V/Cell
Gel-Cell Mode 2.33 V/Cell
Liquid Electrolyte Mode 2.62 V/Cell
Current limited to AMP rating MEAN DC.
Automatic timer starts when first stage voltage limit reached. Proportional CV stage timer - t/2+1 hour.
Constant voltage 2.3 V/Cell after timeout, with Temperature Compenation.
PROTECTION:
Electronic reverse polarity. Short circuit shutdown and current limit.
Combined Circuit Breaker and power switch on front panel.
BATTERY TYPE & RATING (See Page 11 BTS)
ICS chargersare for use with Lead Acid Batteries of Minimum capacity 50 AH, Gel Cell, Absorbed Electrolyte or Liquid Electrolyte types by using the BTS (Battery Type Switch)

DIMENSIONS: (Inches)
12.0 " WIDE, 7.0" FRONT TO BACK, 7.0" HIGH

CONFORMS TO U.L. 1236

PROFESSIONAL SERIES 12 & 24 VOLT SPECIFICATIONS

MODEL PS 12/5
INPUT: 117 Volts AC 60Hz, 110 VA
OUTPUT: 5 Amps DC 12 Volts

MODEL PS 12/10
INPUT: 117 Volts AC 60Hz, 220 VA
OUTPUT: 10 Amps DC 12 Volts

MODEL PS 24/5
INPUT: 117 Volts AC 60Hz, 200 VA
OUTPUT: 5 Amps DC 24 Volts

MODEL PS 24/8
INPUT: 117 Volts AC 60Hz, 320 VA
OUTPUT: 8 Amps DC 24 Volts

Optional Export AC Input Ratings
100v-50Hz AC Input (Japan)
115/ 230v -50Hz AC Input (Europe)

Full Wave Phase Controlled Rectification

CONTROL:
Voltage limit:
Normal Mode 2.42 V/Cell
Gel-Cell Mode 2.33 V/Cell
Liquid Electrolyte Mode 2.62 V/Cell

Current limited to AMP rating MEAN DC.

Automatic timer starts when first stage voltage limit reached. Proportional CV stage timer - t/2+1 hour.

Constant voltage 2.3 V/Cell after timeout, with Temperature Compensation.
PROTECTION:
Electronic reverse polarity. Short circuit shutdown.
and current limit.
AC Input fuse in AC Input connector

BATTERY TYPE & RATING (See Page 11 BTS)
PS chargers are for use with Lead Acid Batteries, Gel Cell Absorbed Electrolyte or Liquid Electrolyte types by using the BTS (Battery Type Switch)

DIMENSIONS: (Inches)
6.5" WIDE, 6.0" FRONT TO BACK, 5.25" HIGH

LINEAGE and EX SERIES SPECIFICATIONS

MODEL: LS 6/6, LS 12/2, LS 12/6, LS 24/3
LS 24/5, LS 36/3, LS 48/5, EX 24/3

Full Wave Phase Controlled Rectification

CONTROL:

Voltage limited to 2.4 Volts/Cell
Current limited to AMP rating Mean D.C.
Finish voltage 2.3 Volts/Cell
Proportional Timed Cyclic Charge Stage
Flashing Yellow LED-to Show 80% State of Charge

PROTECTION:

Electronic reverse polarity
Short circuit shutdown
Low voltage start
Optional: Temperature compensation

DIMENSIONS: Lineage Series
6.5" WIDE, 6.0" FRONT TO BACK, 5.25" HIGH

DIMENSIONS: EX Series
3.5 WIDE, 3.25 FRONT TO BACK, 6.0 HIGH

LISTED

CONFORMS TO
U.L. 1236

IMPORTANT SAFETY INSTRUCTIONS

1. IMPORTANT SAVE THESE INSTRUCTIONS-- This manual contains important safety and operating instructions for all INTERACTER battery chargers.

2. Before using this battery charger, read all instructions and cautionary markings on (1) the battery charger, (2) the battery, (3) product using the battery.

3.CAUTION--To reduce risk of injury, charge only lead acid, maintenance free or flooded lead acid type rechargable batteries. Other types of batteries may burst causing personal injury and damage.

4. Do not expose charger to rain or snow.

5. Use of an attachment not recommended or sold by the battery charger manufacturer may result in a risk of fire, electric shock or injury to person.

6. To reduce risk of damage to electric plug and cord, pull by plug rather than cord when disconnecting charger.

7. Make sure cord is located so that it will not be stepped on, tripped over or otherwise subjected to damage or stress.

8. An extension cord should not be used unless absolutely necessary. Use of improper extension cord could result in risk of fire and electrical shock. If an extension cord must be used, make sure:

a. That pins on plug of the extension cord are the same number, size and shape as those of the plug on the charger.

b. That the extension cord is properly wired

c. That the wire size is large enough for the A/C ampere rating of the charger as specified in the table below:

LENGTH OF CORD (feet)	25	50	100	150
AWG Wire Size	18	18	16	14

9. Do not operate charger with damaged cord or plug. REPLACE THEM IMMEDIATELY.

10. Do not operate charger if it has received a sharp blow, been dropped or otherwise damaged in any way; return it to a qualified service source.

11. Do not disassemble charger; Take it to a qualified service source when repair or service is required. Incorrect reassembly may result in a risk of electrical shock or fire.

12. To reduce risk of electrical shock, unplug charger from outlet before attempting any maintenance or cleaning.

WARNING
RISK OF EXPLOSIVE GASES

1. WORKING IN VICINITY OF A LEAD-ACID BATTERY IS DANGEROUS. BATTERIES GENERATE EXPLOSIVE GASES DURING NORMAL BATTERY OPERATION. FOR THIS REASON, IT IS OF THE UTMOST IMPORTANCE THAT EACH TIME BEFORE USING YOUR CHARGER, YOU READ THIS MANUAL AND FOLLOW THE INSTRUCTIONS EXACTLY.

2. To reduce risk of battery explosion, follow these directions and those published by the battery manufacturer and the manufacturer of any equipment you intend to use in vicinity of the battery. Review cautionary marking on these products and on engine.

PERSONAL PRECAUTIONS

1. Someone should be within range of your voice or close enough to come to your aid when you work near a lead-acid battery.

2. Have plenty of fresh water and soap nearby in case battery acid contacts skin, clothing or eyes.

3. Wear complete eye protection and clothing protection. Avoid touching eyes while working near battery.

4. If battery acid contacts skin or clothing, wash immediately with soap and water. If acid enters eyes, immediately flood eyes with running cold water for at least 10 minutes and get medical attention immediately.

5. NEVER smoke or allow a spark or flame in the vicinity of battery or engine.

6. Be extra cautious to reduce risk of dropping a metal tool onto battery. It might spark or short-circuit battery or other electrical part that may cause explosion.

7. Remove personal metal items such as rings, bracelets. necklaces, and watches when working with a lead acid battery. A lead acid battery can produce a short circuit current high enough to weld a ring or the like to metal. causing a severe burn.

8. Use charger for charging a LEAD-ACID BATTERY ONLY. Do not use battery charger for charging dry-cell batteries that are commonly used with home appliances. These batteries may burst and cause injury to persons and damage to property.

9. NEVER charge a frozen battery.

1.

PREPARING TO CHARGE

If necessary to remove battery from vehicle to charge, always remove grounded terminal from battery first. Make sure all accessories in vehicle are off so as not to cause an arc.

2. Be sure area around battery is well ventilated while battery is being charged. Gas can be forcefully blown away by using a piece of cardboard or other nonmetallic material as a fan.

3. Clean all battery terminals. Be careful to keep corrosion from coming in contact with eyes.

4. Add distilled water in each cell until battery acid reaches level specified by battery manufacturer. This helps purge excessive gas from cells. Do not overfill. For a battery without cell caps, carefully follow manufacturer's recharging instructions.

5. Study all battery manufacturer's specific precautions such as removing or not removing cell caps while charging and recommended rates of charge.

6. Determine voltage of battery by referring to car or equipment owner's manual and make sure it matches output rating of battery charger.

CHARGER LOCATION

1. Locate charger as far away from battery as charging cables will permit.

2. Never place charger above battery being charged; gasses from battery will corrode and damage charger.

3. Never allow battery acid to drip on charger when reading specific gravity or filling battery.

4. Do not operate charger in a closed-in area or restrict ventilation in any way.

5. Do not set a battery on top of charger.

DC CONNECTION PRECAUTIONS

1. Connect and disconnect DC output only after removing AC cord from electric outlet. Never allow clips to touch each other.

2. Attach clips to battery posts and twist or rock back and forth several times to make a good connection. This tends to keep clips from slipping off terminals and helps to reduce risk of sparking.

FOLLOW THESE STEPS WHEN BATTERY IS INSTALLED IN VEHICLE. A SPARK NEAR A BATTERY MAY CAUSE BATTERY EXPLOSION.
TO REDUCE RISKS;
1. Carefully position AC and DC cords to reduce risk of damage by hood, door or moving engine parts.

2. Stay clear of fan blades, belts, pulleys and other parts that can cause injury to persons.

3. Check polarity of battery posts. POSITIVE (POS. P, +), battery posts usually have a larger diameter than the NEGATIVE (NEG. n, -.) posts.

4. Determine which post of battery is grounded (connected) to the chassis.

5. For negative-grounded vehicle, connect POSITIVE (RED) clip from battery charger to POSITIVE (POS, P,+) UNGROUNDED POST OF THE BATTERY. Connect NEGATIVE (BLACK) clip to vehicle chassis or engine block away from battery. DO NOT CONNECT CLIPS TO CARBURETOR, FUEL LINES, OR SHEET METAL BODY PARTS. Connect to a heavy gauge metal part of the frame or engine block.

6. For positive-grounded vehicle, connect NEGATIVE (BLACK) clip from battery charger to the NEGATIVE (NEG, N, -) UNGROUNDED POST OF THE BATTERY. Connect POSITIVE (RED) clip to the vehicle chassis or engine block away from battery. DO NOT CONNECT CLIP TO CARBURETOR, FUEL LINES OR SHEET METAL BODY PARTS. Connect to heavy gauge metal part of the frame or engine block.

7. When disconnecting charger, turn switches to off, disconnect AC cord, remove clip from vehicle chassis and then remove clip from battery terminal.
FOLLOW THESE STEPS WHEN BATTERY IS OUTSIDE VEHICLE. A SPARK NEAR THE BATTERY MAY CAUSE BATTERY EXPLOSION.

TO REDUCE RISK:

1. Check polarity of battery posts. POSITIVE (POS, P, +) battery post usually has a larger diameter than the NEGATIVE (NEG, N, -) post.

2. Attach at least a 24-inch long, 6 gauge (AWG) insulated battery cable to the NEGATIVE (NEG, N, -) battery post.

3. Connect POSITIVE (RED) charger clip to POSITIVE (POS, P, +) of the battery.

4. Position yourself and free end of cable as far away from battery as possible, then connect NEGATIVE (BLACK) charger clip to free end of cable.

5. Do not face battery when making final connection.

6. When disconnecting charger, always do so in reverse sequence while as far away from battery as practical.

7. A marine (boat) battery must be removed and charged on shore. To charge it on board requires equipment specially designed for marine use.

GROUNDING AND AC POWER CORD CONNECTING INSTRUCTIONS

Charger should be grounded to reduce risk of electrical shock. Charger is equipped with an electrical cord having an equipment grounding conductor and a grounding pin. This plug must be plugged into an outlet that is properly installed and grounded in accordance with all local codes and ordinances.

DANGER-- Never alter AC cord or plug provided. If it will not fit outlet, have proper outlet installed by a qualified electrician. Improper connection can result in a risk of an electrical shock.

This battery charger is for use on a nominal 117 volt AC circuit* and has a grounded plug that looks like the plug illustrated in sketch (A). A temporary adapter, which looks like the adapter illustrated in sketches (B) & (C) may be used to connect this plug to a two-pole receptacle as shown in sketch (B) if a properly grounded outlet is not available. The temporary adapter should be used only until a properly grounded outlet can be installed by a qualified electrician.

* Optional Voltages are available.

NOTE: USE OF AN ADAPTER IS NOT ALLOWED IN CANADA. If a grounding type receptacle is not available, DO NOT use this appliance in CANADA until the proper outlet is installed by a qualified electrician.

DANGER-- Before using an adapter as illustrated, be certain that the center screw of the outlet plate is grounded. The green colored rigid ear or lug extending from the adapter must be connected to a properly grounded outlet. Make certain it is grounded.

If necessary, replace original outlet cover plate screw with a longer screw that will secure adapter ear or lug to outlet cover plate and make ground connection to grounded outlet.

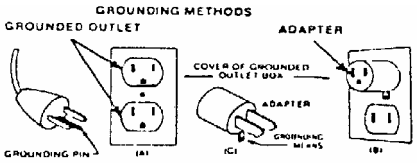

INDUSTRIAL/ COMMERCIAL AND PROFESSIONAL SERIES OPERATING INSTRUCTIONS

This charger is suitable for use with all types of lead acid batteries, including the new types of maintenance free and gelled electrolyte batteries.

1. Disconnect vehicle battery cables.

2. Connect charger to battery. Ensure correct polarity. - BLACK lead to negative (-) terminal and WHITE lead to POSITIVE (+) terminal.

NOTE: THIS CHARGER IS PROTECTED AGAINST REVERSE CONNECTION. CHARGING WILL NOT COMMENCE IF BATTERY IS INCORRECTLY CONNECTED.

3. Connect the charger to AC power supply.
NOTE: THE CHARGER WILL NOW SWITCH ON AND THE YELLOW LED WILL LIGHT.

4. The charger will now commence to charge the battery, as indicated by the RED charging LED's.
NOTE: The length of time the charger remains in the "Charging Mode" depends on the size and state of discharge of the battery. This is controlled by the charger's solid state circuitry which constantly monitors the state of the battery and provides the correct charge automatically.
IMPORTANT: The charger should be allowed to go through the complete charge routine in order to obtain the optimum charge. This will take a minimum of one hour.

5. When the GREEN "READY" LED comes ON, the battery is ready for use.
NOTE: The battery may be connected to the charger in the "READY" mode indefinitely, in order to maintain the battery in a fully charged state while not in use without risk of over charging.
IMPORTANT: The charger must be disconnected from the power supply before disconnecting from the battery to prevent the possibility of arcing.

6. During charging, the current flowing into the battery is indicated by the LED Amp Meter. At the start of charge, if the battery is normally discharged, all 4 RED LED's will be on, and will go out in sequence as the charge current drops. When the last RED LED goes off, the internal proportional timer will start, the GREEN LED will show proportional to the time of the constant current time. (T/2+1hr)

7. If the battery voltage is less than half a volt, the battery is considered very heavily discharged. In this case, the YELLOW charging LED will NOT show.

"LINEAGE and EX SERIES" OPERATING INSTRUCTIONS

This charger is suitable for use with all types of lead acid batteries, including the new types of Maintenance-Free and Gelled Electrolyte batteries.

1. Disconnect vehicle battery cables.

2. Connect charger to battery. Ensure correct Polarity. BLACK lead to Negative (-) terminal and RED lead to Positive (+) terminal.
NOTE: THE CHARGER IS PROTECTED AGAINST REVERSE CONNECTION. CHARGING WILL NOT COMMENCE IF THE BATTERY IS INCORRECTLY CONNECTED.

3. Connect the charger to an A.C. Power Supply. Check that the Red (Power) and Yellow (Charge) indicator Led’s are On. After a time (Which depends on how heavily the battery is discharged) , the yellow Led will begin to flash, indicating the battery has reached 80% recharge level.

4. After a further time, the Green “Ready” Led will indicate that the battery is fully charged. The minimum time before the green “Ready” Led shows is one hour. The battery should be left on charge until required for use.

NOTE: The length of time the charger remains in the Yellow charging mode depends on the size and "State of Charge" of the battery. This function is controlled by the solid State Circuitry of the charger which provides the correct charge profile automatically. This charger can be left connected to the battery for extended periods of time safely.

SPECIAL NOTE: BATTERIES THAT HAVE A SUSPECT CONDITION, PARTICULARLY "SULFATED CELLS", MAY WHEN FIRST CONNECTED, GO DIRECTLY TO THE "FLASHING YELLOW" L.E.D. INDICATION. THEN AFTER CURRENT FLOW BEGINS, THE YELLOW **CHARGE** L.E.D. STAYS ON INDICATING THAT A NORMAL CHARGE CYCLE IS NOW OPERATING. THIS SHOULD BE CONSIDERED NORMAL OPERATION.

TROUBLESHOOTING GUIDE

YELLOW **CHARGE** LIGHT DOES NOT SWITCH ON; The charger will not commence charging unless properly connected.

1. Check to ensure the charger is connected correctly - BLACK lead to NEGATIVE (-) terminal and RED lead to POSITIVE (+) terminal or that the Factory installed OEM (Original Equipment Manufacturer) custom connector is properly installed regarding the Polarity at the connectors contact terminals or at the mating connector on the battery or equipment.

2. Check that the clips made a good connection to the battery posts. Twist clips or clean battery posts to ensure good connection.

GREEN **READY** LIGHT DOES NOT APPEAR AFTER 18 HOURS;

3. The Microprocessor Control can indicate a problem with the battery. If the battery has not reached the First Stage of the Operation within 18 hours, the charger may determine that a problem exists within the battery or the battery is too big for the charger's output rating. The OVERRIDE TIMER FUNCTION is shown by the GREEN LED FLASHING". If the battery is sized correctly per the graph on the back of the "NOW YOU'LL KNOW" Sales Brochure then the battery should be examined for defects.

SERIES AND PARALLEL CHARGING

1. Two 6 volt batteries may be charged with a 12 volt charger if they are connected in SERIES as shown below:

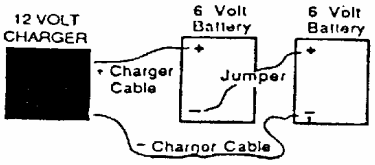

CAUTION; NEVER UNDER ANY CIRCUMSTANCES ATTEMPT TO CHARGE A SINGLE 6 VOLT BATTERY WITH THIS CHARGER. THIS WILL RESULT IN SERIOUS DAMAGE TO THE BATTERY AND CREATE A RISK OF EXPLOSION. EXTREME CARE SHOULD BE TAKEN TO CONNECT THE BATTERIES ONLY AS SHOWN ABOVE. IMPROPER CONNECTION CAN RESULT IN EXPLOSION AND SERIOUS INJURY.

2. Two or more 12 volt batteries may be bank charged with the 12 volt charger if they are connected in parallel as shown below.

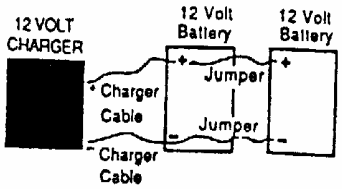

NOTE: It is important that the batteries in the circuit be of the same type (e.g. maintenance free only or conventional lead acid only). Mixing different types of batteries in the same circuit will result in improper charging.

24 VOLT CHARGER

1. Two 12 volt batteries may be charged with a 24 volt charger if they are connected in SERIES as shown below.

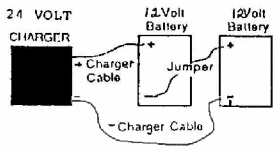

CAUTION: EXTREME CARE SHOULD BE TAKEN TO CONNECT THE BATTERIES ONLY AS SHOWN ABOVE. IMPROPER CONNECTION CAN RESULT IN EXPLOSION AND SERIOUS INJURY.

STORAGE INSTRUCTIONS

1. When not in use, store the charger indoors in a cool dry place, preferably with it's original packing and carton.

2. Place these instructions with the charger during storage.

MAINTENANCE AND CLEANING

Very little maintenance is required other than protecting it from damage and weather.

1. Coil cord when not in use.

2. Clean case and cords with a slightly damp cloth.

3. Corrosion on the clips may be removed with a solution of water and baking soda.

4. Examine cords for damage periodically and replace if necessary with manufacturer approved parts.

SERVICE

This charger is a solid state device and should not require service under normal operating conditions and use according to these instructions. For service call or write the manufacturer.

CAUTION - RISK OF ELECTRICAL SHOCK. Do not attempt any servicing unless you are authorized and qualified to do so.

INSTRUCTIONS IMPORTANTES CONCERNANT LA SECURITE

a. CONSERVER CES INSTRUCTIONS. CE MANUEL CONTIENT DES INSTRUCTIONS IMPORTANTES CONCERNANT LA SECURITE ET LE FONCTIONNEMENT;

b. IL EST DANGEREUX DE TRAVAILLER A PROXIMITE D'UNE BATTERIE AU PLOMB LES BATTERIES PRODUISENT DES GAS EXPLOSIFS EN SERVICE NORMAL, AUSSI EST-IL IMPORTANT DE TOUJOURS RELIRE LES INSTRUCTIONS AVANT D'UTILISER LE CHARGER ET DE LES SUIVRE A LA LETTRE;

c. POUR REDUIRE LE RISQUE D'EXPLOSION, LIRE CES INSTRUCTIONS ET CELLES QUI FIGURENT SUR LA BATTERIE;

d. NE JAMAIS FUNER PRES DE LA BATTERIE OU DU MOTEUR ET EVITER TOUTE ETINCELLE OU FLAMME NUE A PROXIMITE DE CES DERNIERS;

e. UTILISER LE CHARGEUR POUR CHARGER UNE BATTERIE AU PLOMB UNIQUEMENT. CE CHARGEUR N'EST PAS CONCU POUR ALIMENTER UN RESEAU RESEAU ELECTRIQUE TRES BASSE TENSION NI POUR CHARGER DES PILES SECHES.

LES FIAT D'UTILISER LE CHARGEUR POUR CHARGER DES PILES SECHES POURRAIT ENTRAINER L'ECATEMENT DES PILES ET CAUSER DES PILES SECHES POURRAIT ENTRAINER L'ECATEMENT DES PILES ET CAUSER DES BLESSURES OU DES COMMAGES;

f. JAMAIS CHARGER UNE BATTERIE GELEE.

g. S'IL EST NECESSAIRE DE RETIRER LA BATTERIE DU VEHICULE POUR LA CHARGER, TOUJOURS DEBRANCHER LA BORNE DE MISE A LA MASSE EN PREMIER. S'ASSURER QUE LE COURANT AUX ACCESSOIRES DU VEHICULE EST COUPE AFIN D'EVITER LA FORMATION D'UN ARC;

h.PRENORE CONNAISSANCE DES MESURES DE PRECAUTION SPECIFIEES PAR LE FABRICANT DE LA BATTERIE, P. EX. VERIFIER S'IL FAUT ENLEVER LES BOUCHONS DES CELLULES LORS DU CHARGEMENT DE LA BATTERIES, LES TAUX DE CHARGEMENT RECOMMANDES;

i. NE JAMAIS PLACER LE CHARGEUR DIRECTEMENT SOUS LA BATTERIE A CHARGER OUR AU-DESSUS DE CETTE DERNIERE. LES GAS DU LES FLUIDES QUI S'ECHAPPENT DE LA BATTERIE PEUVENT ENTRAINER LA CORROSION DU CHARGEUR AUSSI LOIN LA BATTERIE QUE LES CABLES C.C. LE PERMETTENT;

j. WE PAS FAIRE FONCTIONNERS LE CHARGEUR DANS UN ESPACE CLOS ET/OU NE PAS GENER LA VENTILATION;

k. METTRE LES INTERRUPTEURS DU CHARGEUR HORS CIRCUIT ET RETIRER LE CORDON C.A. DE LA PRISE AVANT DE METTRE ET D'ENLEVER LAS PINCES DU CORDON C.C S'ASSURER QUE LES PINCES NE'SE TOUCHENT PAS;

l. SUIVRE LES ETAPES SUIVANTES LORSQUE LA BATTERIE SE TROUVE DANS LE VEHICULE. UNE ETINCELLE PRES DE LA BATTERIE POURAIT PROVOQUER L'EXPLOSION DE CETTE DERNIERRE. POUR REDUIRE LE RISQUE D'ETINCELLE A PROXIMITE DE LA BATTERIE;

i. PLACER LES CORDONS C.A. ET C.C. DE MANIERE A EVITER QU'ILS SOIENT ENDOMMAGES PAR LE CAPOT, UNE PORTIERE OU LES PIECES ERN MOUVEMENT DU MOTEUR;

ii. FAIRE ATTENTION AUX PALES, AUX COURROIES ET AUX POULIES DU VENTILATEUR AINSI QU'A TOUTE AUTRE PIECE SUSEPTIBLE DE CAUSER DES BLESSURES;

iii. VERIFIER LA POLARITE DES BORNES DE LA BATTERIE. LE DIAMETRE DE LA BORNE POSITIVE (POS, P, +) EST GENERALMENT SUPERIEUR A CELUI DE LA BORNE NEGATIVE (NEG, N, -);

iv. DETERMINER QUELLE BORNE EST MISE A LA MASSE (RACCORDEE AU CHASSIS). SI LA BORNE NEGATIVE EST PACCORDEE AU CHASSIS (COMME DANS LA PLUPART DES CAS), VOIR LE POINT (V) SI LA BORNE POSITIVE EST RACCORDEE AU CHASSIS, VOIR LE POINT (VI);

v. SI LA BORNE NEGATIVE EST MISE A LA MASSE, RACCORDER LA PINCE POSITIVE (ROUGE) DU CHARGEUR A LA BOURNE POSITIVE (POS, P, +) NON MISE A LA MASSE DE LA BATTERIE. RACCORDER LA PINCE NEGATIVE (NOIRE) AU CHASSIS DU VEHICULE OU AU MOTEUR. LOIN DE LA BATTERIE. NE PAS RACCORDER LA PINCE AU CARBURATEUR, AUX CANALISATIONS D'ESSENCE NI AUX PIECES DE LA CARROSSERIE EN TOLE. RACCORDER A UNE PIECE DU CARDRE OU MOTEUR EN TOLE DE FORTE ESPAISSEUR;

vi. SI LA BORNE POSITIVE EST MISE A LA MASSE, RACCORDER LA PINCE NEGATIVE (NOIRE) DU CHARGEUR A LA BORNE NEGATIVE (NEG, N, -) NON MISE A LA MASSE DE BATTERIE. RACCORDER LA PINCEPOSITIVE (ROUGE) AU CHASSIS DU VEHICULE DU AU MOTEUR, LOIN DE LA BATTERIE. NE PAS RACCORDER LA PINCE AU CARBURATEUR, AUX CANALISATIONS D'ESSENCE NI AUX PIECES DE LA CARROSSERIE EN TOLE. RACCORDER A UNE PIECE DU CADRE DU DU MOTEUR EN TOLE DE FORTE EPAISSEUR.

vii. BRANCHER LE CORDON D'ALIMENTION C.A. DU CHARGEUR.

viii. POUR INTERROMPRE L'ALIMENTATION DU CHARGEUR, METTRE LES INTERRUPTEURS HORS CIRCUIT, RETIRER LE CORDON C.A. DE LA PRISE,ENLEVER LA PINCE RACCORDEE AU CHASSIS ET EN DERNIER LIEU CELLE RACCORDEE A LA BATTERIE.

m. L'UTILISATION D'UN ADAPTEUR EST INTERDITE AU CANADA. SI UNE PRISE DE COURANT AVEC MISE A LA TERRE N'EST PAS DISPONIBLE EN FAIRE INSTALLER UNE PAR UN ELECTRIEN QUALIFIE AVANT D'UTILISER CET APPARIL.

All 117 AC volt Interacter Professional and Lineage Series chargers have an AC input fuse located in the fuse drawer found below the AC power cord. To access the fuse, you must remove the power cord first and use a screwdriver to open the fuse compartment. If the fuse requires replacement, the same type and value fuse must be used. The rating for the fuse is found on the serial number label.

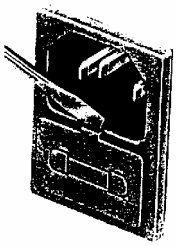

MOUNTING INSTRUCTIONS FOR MODEL EX AND LS WALL MOUNT CHARGERS

For units fitted with wall mounting brackets, the battery charger should be securely attached to an indoor, dry, vertical surface using four brass #8 X 1 round head wood screws. (not supplied) The unit must be mounted vertically with the wires at the bottom, in a location where airflow for cooling is unobstructed for six inches above and three inches to each side of the battery charger.

MODEL EX 2402 evaluated to UL 1012

SPECIAL "BTS" (Battery Type Switch) FEATURE

The Professional and I/C Series charger is fitted with a Dealer settable BTS (Battery Type Switch). The charging circuitry will work correctly with Sealed, Gelled or Flooded type batteries.

Only an INTERACTER Authorized Service Technician is authorized to change the charger battery type setting. NOTE: Failure to select the correct setting will affect the performance of the battery, and may cause the battery to gas and void any Warranty on the Battery. If Battery Type is not specified the charger will be supplied set to the "NORMAL" mode which will provide good performance with most Battery Types and applications.

The BTS is NOT intended for consumer use. If your Dealer or Authorized Service Technician is unable to offer you this Service, contact the Factory for assistance.

The charger is Factory set in the "Normal Mode" unless otherwise specified by the original purchaser.

INTERACTER reserves the right to make changes in it’s product without notice.

INTERACTER BATTERY CHARGER LIMITED WARRANTY

Interacter, Inc. warrants the accompanying Interacter battery charger (the "UNIT") to be free from defects in materials and workmanship for a period of 12 months from the date of purchase. In addition, Interacter, Inc. warrants the transformer for a period of two years. This warranty applies to normal and non-commercial use and is subject to the terms and conditions given below.

For performance of the warranty, contact INTERACTER, INC. at (203) 630-0199 for information. If it is necessary to return the Unit for repair or replacement, you will be given a return authorization number. The Unit must be returned freight prepaid, in the original factory carton in order to prevent damage. Warranty does not cover such damage.

To qualify for warranty service, the following must be returned with the Unit; (a) A letter explaining the difficulties experienced with the Unit, (b) The return authorization number and (c) A copy of proof of the original purchase, such as a sales receipt or canceled check.

Failure to operate or maintain the Unit in compliance with the instructions furnished in the owner's manual, unreasonable use, use of replacement parts and repairs not authorized by the manufacturer, accidents, negligence or commercial use voids this warranty. Parts subject to normal wear and tear are not covered by this warranty.

Should a unit be returned for a cause not covered by this warranty or without the items specified above, any repairs, handling or testing will be made at the owner's expense and risk.

ALL IMPLIED WARRANTIES, INCLUDING, BUT NOT LIMITED TO, ANY IMPLIED WARRANTIES OF MERCHANTABILITY OR FITNESS ARE LIMITED IN DURATION TO NINETY (90) DAYS. REPAIR OR REPLACEMENT AS STATED HEREIN IS THE OWNER'S SOLE REMEDY. FOR BREACH OF ANY KIND AND ALL WARRANTIES AND THE SOLE REMEDY FOR INTERACTER LIABILITY OF ANY KIND WITH RESPECT TO THE UNIT.

THERE SHALL BE NO LIABILITY FOR SPECIAL, INCIDENTAL, OR CONSEQUENTIAL DAMAGES, INCLUDING BUT NOT LIMITED TO, LOSS OF USE, INCONVENIENCE, LOSS OF TIME, OR DAMAGES TO ANY BUSINESS PROPERTY, WHETHER AS A RESULT OF BREACH OF WARRANTY, NEGLIGENCE, STRICT LIABILITY IN TORT, OR OTHERWISE.

This warranty gives you specific legal rights. You may have other rights which vary from state to state. Some states do not allow limitations on the length of any implied warranty or the limitations or exclusion of incidental or consequential damages. Because of this, the above limitations or exclusions may not apply to you.

MODEL : _____ Volt _____ Amp _____ SERIAL # _____

(record here for your records)

INTERACTER, Inc.
Meriden, CT 06450
U.S.A.

Rev E 7/08

HYJD-DC-25 TROUBLE SHOOTING GUIDE

PROBLEM	CIRCUIT BOARD LIGHTS (ON)														SOLUTIONS
	POWER	SAFTEY	AUX	TIMER	TIMER HOLD	STOP	OPEN LIMIT	CLOSE LIMIT	SINGLE	CLOSE	OPEN	GATE OPEN	GATE CLOSE	TIMER ACTIVE	
Gate stopped in any position															1 Check for power 2 Check for broken spring or cable 3 Overload relay tripped ?
	X						X	X							4 Stop circuit broken (terminals 7 & 8)
	X					X	X	X				X			5 Over run timer reached, manual valves open or low oil pressure, out of oil.
	X					X	X	X					X		6 Over run timer reached same as #5
Gate stopped in open position	X	X				X		X							1 Safety circuit activated (remove wires from terminal 3 until light goes out, trace wire to trouble)
	X			X		X		X							2 Timer circuit activated (remove wire from terminal 5 until light goes out, trace wire to trouble)
	X	X		X		X		X						X	3 gate timing, safety and timer must be deactivated to resume operation.
	X					X									4 Close limit failure
Gate stopped in close position	X					X	X								1 Open limit failure
	X			X		X	X								2 Timer item failure (keypad, card reader, open and set timer button, etc.)
	X					X	X				X				3 Open button failure
Motor runs but gate does not operate (shown in closed position)	X					X	X				X	X			1 Check manual valves (close if needed)
	X					X	X				X	X			2 If 3 Phase, reverse 2 legs (check rotation)
	X					X	X				X	X			3 Check for valve operation (115 VAC at coils)
Gate opens but motor does not stop running	X					X	X	X							1 Open limit failure or open limit relay failure
Gate closes but motor does not stop running	X					X	X	X							1 Close limit failure or close limit relay failure 2 Close limit needs to be adjusted
Contactor pulls in but motor does not run	X					X		X							1 Check wiring at contactor
	X					X		X							2 Check wiring in motor junction box
	X					X		X							3 Check for motor failure (local motor shop)
Gate runs considerably slower in one direction	X					X	X	X							1 Check to see that both manual valves are closed
	X					X	X	X							2 Check balance of barrier (open manual valves and raise barrier by hand checking to see if gate will stay put in any position-adjust springs accordingly)
Gate operates in jerky inconsistent manner	X					X	X	X							1 Check oil level (see specifications)
Motor runs in jerky inconsistent manner	X					X	X	X							1 Check voltage while running (over 3% drop unacceptable) (compare to cover voltage)
	X					X	X	X							2 Oil pressure too high (consult mfg.)
Plastic covering coming off of cable (shut off power when inspecting balance system)															1 Normal wear cable can be lubed (replace cable if seven or more steel strands are broken)
Gate squeaking while operating (shut off power)															1 Cable connections dry lube with cable lube 2 Check cable sheave bearings (replace as needed)
Barrier no longer slows down before reaching limit	X					X	X								1 Check operation of slow down valves (115 VAC)

*The stop and both limit circuits are NC therefore the light goes out when that circuit is activated.

*When calling Ideal Mfg. for technical help, please note the lights during the problem occurring for easier trouble shooting.